New isostatic mounting concept for a space born Three Mirror Anastigmat (TMA) on the Meteosat Third Generation Infrared Sounder Instrument (MTG-IRS)

Maximilian Freudling[a], Jesko Klammer[a], Gregory Lousberg[b], Jean-Marc Schumacher[b], Christian Körner[a]

[a]OHB System AG, Manfred-Fuchs-Str.1, 82234 Wessling, Germany, [b]AMOS, rue des Chasseurs Ardennais, 2, 4031 Angleur, Liege, Belgium

ABSTRACT

A novel isostatic mounting concept for a space born TMA of the Meteosat Third Generation Infrared Sounder is presented. The telescope is based on a light-weight all-aluminium design. The mounting concept accommodates the telescope onto a Carbon-Fiber-Reinforced Polymer (CRFP) structure. This design copes with the high CTE mismatch without introducing high stresses into the telescope structure. Furthermore a Line of Sight stability of a few microrads under geostationary orbit conditions is provided. The design operates with full performance at a temperature 20K below the temperature of the CFRP structure and 20K below the integration temperature. The mounting will sustain launch loads of 47g. This paper will provide the design of the Back Telescope Assembly (BTA) isostatic mounting and will summarise the consolidated technical baseline reached following a successful Preliminary Design Review (PDR).

Keywords: Meteosat, Imagery, Infrared Sounding, Optics, MTG, Telescope, mounting concept

1. INTRODUCTION

The Meteosat Third Generation (MTG) Programme is being realised through the well-established cooperation between EUMETSAT and ESA. It will ensure the future continuity with and enhancement of operational meteorological (and climate) data from geostationary orbit as currently provided by the Meteosat Second Generation (MSG) system.

The industrial prime contractor for the space segment is Thales Alenia Space (France) with a core team consortium including OHB-Bremen (Germany) and OHB-Munich (Germany). This contract includes the provision of six satellites, four Imaging satellites (MTG-I) and two sounding satellites (MTG-S), which will ensure a total operational life of the MTG system in excess of 20 years.

MTG-S carries the Fourier transform interferometry based Infrared Sounder (IRS), the design of which contains a Back Telescope Assembly (BTA) which will relay the interferogram beam into the cold optics and then to the focal planes. This BTA is based on a new isostatic mounting concept that has been developed, in collaboration between OHB (as prime contractor of the IRS instrument) and AMOS (Advanced Mechanical and Optical Systems – Liege, Belgium – as supplier of the BTA), for a space born Three Mirror Anastigmat (TMA) light-weight for the MTG IRS. The TMA with additional folding mirror is based on a light-weight all-aluminium design.

For the BTA an all-aluminium design, both structure and mirrors are made of the same aluminium alloy (see Figure 1), has been chosen since it has several advantages such as introducing no stresses due to CTE mismatches between structure and mirrors. The high thermal conductivity of aluminium lowers the thermal gradients inside the telescope structure. An additional big benefit for an aluminium design is the well-known design and manufacturing process. The selection of the all-aluminium design has a significant disadvantage which is the high CTE difference to the main structure of the IRS. This main structure is made of CFRP (Carbon-Fiber-Reinforced-Polymer). To cope with this significant mismatch a new isostatic mounting concept was developed accommodating the TMA aluminium (measured CTE value is 22.5 µm/(m*K)) structure onto the CFRP structure (CTE about 0-2 µm/(m*K)).

Advances in Optical and Mechanical Technologies for Telescopes and Instrumentation II,
edited by Ramón Navarro, James H. Burge, Proc. of SPIE Vol. 9912, 99121F
 · doi: 10.1117/12.2232782

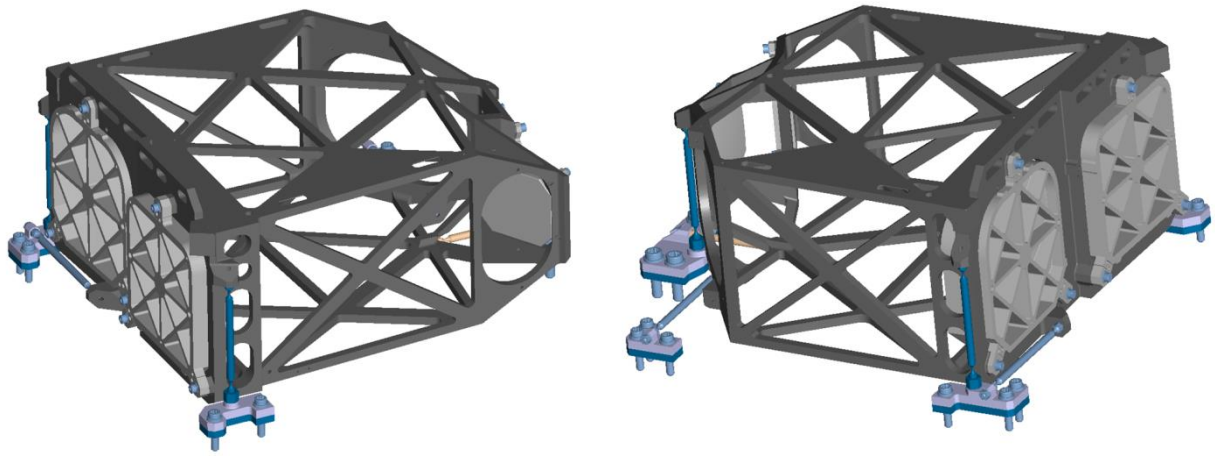

Figure 1. Overview of BTA structure (dark grey), mirrors (light grey) and interfaces (blue).

In the frame of the preliminary design phase of the BTA project a new isostatic mounting concept was developed. This isostatic mount had several requirements to be fulfilled.

Due to the instrument constrains the allocated volume available for the BTA is only slightly (a few centimetre) larger than the volume used for the optical beams of the TMA. This fact made the conception of the telescope structure isostatic mount quite demanding and standard approaches as consisting of three bi-pods or blades were not possible because of limited space. Especially since no symmetric arrangement of the standard element were possible which is necessary to have a high stability with CTE mismatches.

Another important aspect of the isostatic mounting is to compensate for the temperature transition from integration temperature of 20°C to the operational temperature of under 0°C. Therefore the impact of the transition is required to be within the tight budgets of the Light of Sight (LoS) shift or introduced stresses in the telescope structure which causes an increase of the Surface Form Error (SFE) and therefore downgrades the Wave Front Error (WFE).

Furthermore the first Eigen-Frequency of the BTA is required to be above 200 Hz.

The most important requirement on the isostatic mounting concept is to be insensitive to the mounting surface planarity to not induce stresses in the TMA structure or misalign it during integration and alignment.

2. OVERVIEW OF ISOSTATIC MOUNTING CONCEPT

As mentioned in the introduction an all-aluminium design has several advantages. However the great challenge was to develop a mounting concept which is capable of coping with the big CTE mismatch but also sustains the launch loads (47g Design Load Factor). This CTE mismatch is about 20 µm/m*K between aluminium and CFRP, introducing only very limited stresses into the sensitive TMA structure. In addition the operational temperature of the TMA is below 0°C, which is more than 20K below the integration and alignment temperature. Therefore the difference in length for the temperature transition over the telescope structure is larger than 150µm (approximation: CTE difference (~20µm/mK) * Delta T (~20K) * Size of BTA (~330 mm)).

In general the mounting principle is based on six independent interface elements, so-called needles, each blocking one degree of freedom but providing high flexibility for the other degrees of freedom, see Figure 2. This interface elements are made of titanium to be able to sustain the high stresses in the weak part during launch.

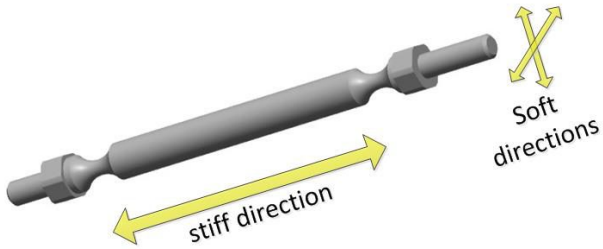

Figure 2. Illustration of needle soft and stiff directions.

In order to cope with this significant length change the telescope structure is held parallel to the mounting plane with three vertical needles fixing the out-of-plane movements of the BTA (Z-position and rotation around Y- and X-direction) but guaranteeing a high flexibility for all directions parallel to the mounting plane (lateral in X- and Y-direction), see Figure 2. This high flexibility parallel to the mounting plane allows to compensate the large length difference between telescope structure and main structure caused by the transition from alignment to operational temperature (delta >20K).

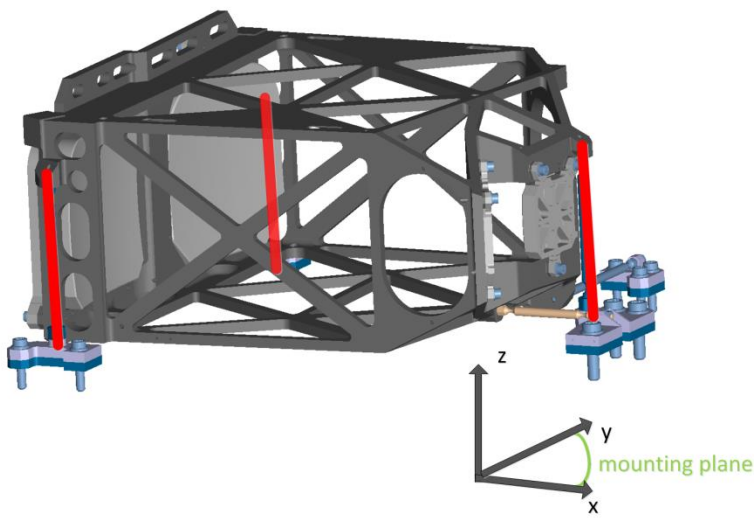

Figure 3. Mounting concept in Z-direction.

Two further degrees of freedoms are fixed by introducing two needles parallel to the mounting plane in Y-direction. This is illustrated in Figure 2. These two introduced needles are blocking the lateral displacement in Y-direction but also the rotation around Z-direction.

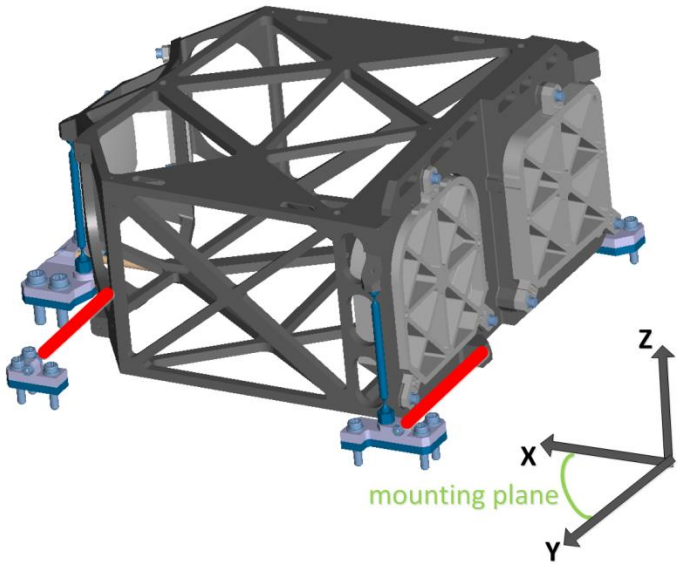

Figure 4. Mounting concept in Y-direction.

The remaining unfixed degree of freedom is clamped by one single needle in X-axis direction what is illustrated in Figure 5.

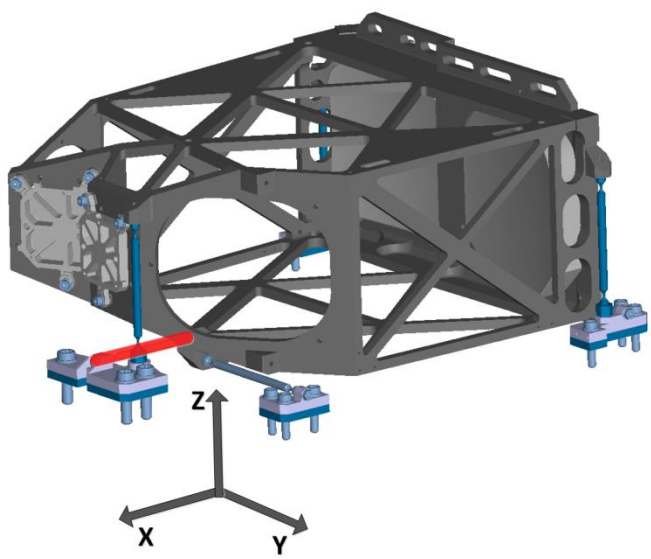

Figure 5. Mounting concept in X-direction.

3. DESIGN OPTIMIZATION

To cope with all the demanding constrains as described in the introduction and applicable to the BTA several trade-offs and optimizations where performed in the conceptual phase of the mounting design. These studies are described in this chapter.

3.1 Find optimal position and length of needles

As three different materials are used , aluminium for the TMA structure and mirrors, titanium for the needle elements and CFRP for the main structure, one of the main challenge was to maintain the optical interfaces during the transition to 0°C. A very stable BTA Line of Sight (LoS) is required to not deviate from the on-ground characterized IRS LoS in-orbit.

The criteria for the location of the needle fixation and the length of the needle was to keep the optical axis of the a-focal interface at a stable position during the transition from integration (about 20°C) to operational temperature (<0°C). It is utilized that the length change of the needle and the length change between the needle fixation at the structure to the optical axis compensate each other. For a better understanding refer to Figure 6.

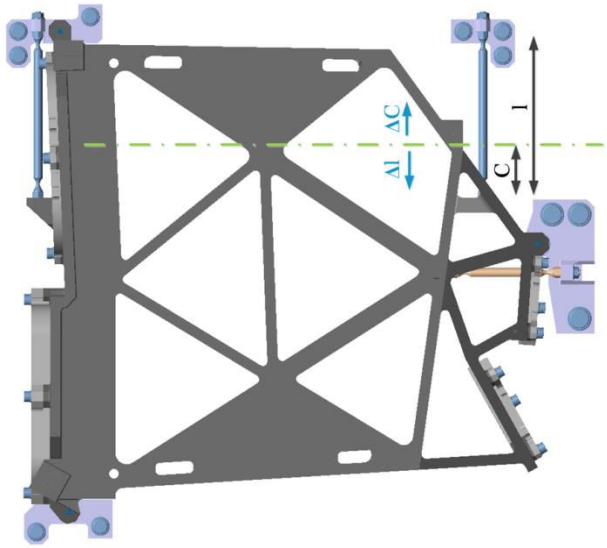

Figure 6. Needle length change and optical axis position with respect to fixation point.

This can also be expressed in the formula

$$\Delta\, optical\ axis = \Delta C_{20°C \to 0°C} - \Delta l_{20°C \to 0°C}. \quad (1)$$

From Figure 6 it is evident that the length change Δl is in the opposite direction as the changing difference between the needle fixation location and the optical axis, named ΔC. The change of the distance between the needle fixation and the optical axis can be expressed as a function of the distance at 20°C $C_{aluminium\ (20°C)}$, the temperature difference ΔT and the CTE of aluminium $\alpha_{aluminium}$.

$$\Delta C_{20°C \to 0°C} = C_{aluminium\ (20°C)} * \Delta T * \alpha_{aluminium}. \quad (2)$$

Fortunately the length change of the needle delta $\Delta l_{20°C \to 0°C}$ is acting in the opposite direction and depends on the needle length $l_{needle20°C}$, the temperature difference ΔT of the needle and the CTE of titanium $\alpha_{titanium}$.

$$\Delta l_{20°C \to 0°C} = l_{neelde\ (20°C)} * \Delta T * \alpha_{titanium} \quad (3)$$

The same principle was applied for all six needles.

3.2 Find necessary diameter of the thin needle parts

Based on the estimations as described in the previous chapter a simplified Finite Element Model (FEM) of the BTA was established with the optimized needle fixation location. The simplified FEM including the needles, telescope structure and mirrors had the same Centre of Gravity (CoG) and mass as the telescope. Using the simplified FEM analysis were performed to calculate the interface force with an acceleration of 1g in all three directions. These data were used to derive the maximum axial forces under the specified load of 47g. With this information of maximal occurring axial

forces in the needles and the previously estimated needle length the minimum diameter of the weak part of the needles was determined.

To do so a parametric model of a needle was established modelling the length and weak part of the needle and therefore support analyses on needle stiffness, axial forces, etc. depending on these two parameters.

By use of this parametric model the maximum allowed axial force as a function of the weak part diameter (D) was calculated, taking into account the maximum stress of the used titanium of about 700MPa[1] (Factors of Safety are considered). This results can be seen in Figure 7 (maximum axial forces). The diameter of the needles in each direction was selected separately. From the first calculations a needle diameter in X-direction = 2.0mm, Y-direction = 1.5mm and Z-direction = 1.6mm was determined.

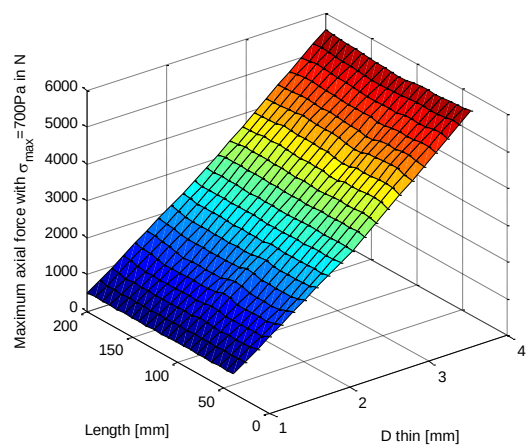

Figure 7. Maximal axial force of needle as a function of needle length and weak section diameter, with a maximum stress of 700MPa.

Furthermore a trade-off needed to be considered to have the weak section of the needle as thin as possible, in order to have a soft interface insensitive to interface deformations, but also thick enough to guarantee the specified stiffness of the mounting concept which required a minimum Eigen-Frequency of 200 Hz. In order to check if the used needles also fulfil the demands of the Eigen-Frequency requirement the needed stiffness was calculated from equation 4. The BTA was assumed to be a single-mass-oscillator. For all directions the needle stiffness was calculated individually by dividing the needed overall stiffness in one direction by the amount of needles in this direction. A rigid telescope structure was considered for simplification during the conception of the mounting.

$$f_n = \frac{1}{2\pi}\sqrt{\frac{k}{m}} \tag{4}$$

The stiffness of the needles in the three different directions were calculated depending on the amount of needles in each direction. In the end it was checked that the minimum stiffness of the needles to fulfil the Eigen-Frequency is in line with the needle dimensions derived from the load analysis. Therefore Figure 8 (axial stiffness) was used.

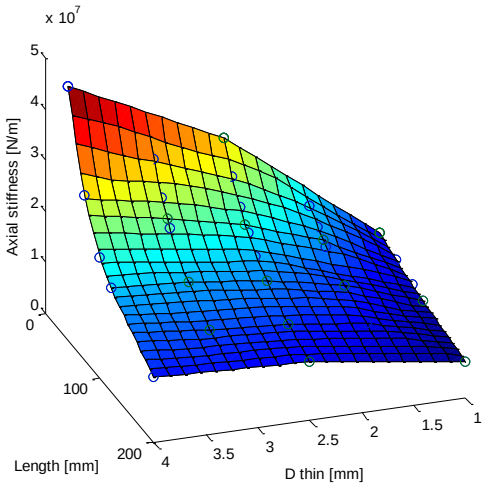

Figure 8. Axial stiffness of needle depending on needle length and diameter D.

4. RESULTS

As mentioned in the introduction the BTA project has already passed the PDR and is in the middle of the detailed design phase. From the PDR analysis loop the following results were obtained by the subcontractor AMOS confirming the conceptual design work leaded by OHB System AG.

The first Eigen-Frequency of the BTA obtained for the detailed FEM of the PDR analysis presents the good result of 225 Hz.

The stresses introduced into the telescope structure and mirror due to the CTE mismatches between aluminium structure and mirror, titanium needles and CFRP main structure were also analysed. This results in a wave front error due to CTE mismatches of 22nm which affects the overall specified WFE of 180nm to less than 1% (rss summation).

Furthermore the LoS stability during the temperature transition from 20°C to under 0°C is calculated to be 1.2 arcsec. This is only 4% of the specified stability.

The in orbit LoS performances were calculated in two different ways, static off-set and worst case dynamic variations over the different seasons of the geostationary orbits. The static pointing error due to gravity release, moisture expansion and due to thermal control induced distortions of the CFRP main structure is expected to be less than 15 µrad. Moreover the dynamic pointing stability disturbed by the dynamic movement of the CRFP thermal controlling is less than one arcsec. Both in-orbit LoS analysis present results which leave more than 50% of margin to the specification and even exceeds the expectation from phase A studies.

5. CONCLUSION

The analysis results of the preliminary design confirm that the ambitious performance requirement on LoS and WFE can be met with margin. This excellent results were enabled by the new isostatic mounting concept. The manufacturing of the BTA qualification model is currently under progress and optical test results are expected within the coming year.

6. ACKNOWLEDGEMENT

The authors acknowledge that this work is supported by an ESA funding through the MTG satellites development.

7. REFERENCES

[1] Fischer, U., Näher, F., Röhrer, W., et. al, [Tablellenbuch Metall], Verlag Europa-Lehrmittel, Hann-Gruiten, (2002).

[2] Tipler, P. A., [Physik – Für Wissenschaftler und Ingenieure], Elsevier GmbH, München, (2004).