Production engineering and implementation of a modular military binocular

W. J. Trsar
R. J. Benjamin
Bell & Howell Company
Optics Division
7100 McCormick Road
Chicago, Illinois 60645

J. F. Casper
U. S. Army ARADCOM
Picatinny Arsenal
Dover, New Jersey 07801

Abstract. The U. S. Army's new M19 binocular, which incorporates an unusual modular assembly concept for simplified maintainability, is currently being produced at the rate of 2,000 per month. In succeeding sections of this paper, the origin and development by the Army of the modular concept for this binocular are reviewed briefly and performance requirements are summarized. Following this, the manufacturing engineering approach and implementation developed and carried out by the Optical Division of Bell & Howell Company in producing the M19 binocular are presented.

Keywords: optomechanical design; binoculars; modular optics; optical manufacturing.

Optical Engineering 20(2), 201-207 (March/April 1981).

CONTENTS

1. GENESIS OF THE M19 BINOCULAR

During the second World War, the U. S. Armed Forces invested heavily in the purchase of binoculars. Unofficial surveys indicate that over 400,000 6×30 and 7×50 instruments were purchased from mobilization suppliers. These binoculars were primarily adaptations of commercially available instruments, with only minor changes, such as the addition of a reticle, made to address military utilization. The rapid expansion of binocular inventories ceased at the end of the war and only a few thousand new instruments were since purchased. The Korean conflict witnessed the utilization of World War II instruments.

Four major issues were raised by wartime experiences. They were: weight, size, mechanical reliability, and maintainability. Improvements were made to enhance the watertightness of the three primary binocular models but studies, conducted in 1955, concluded that no major reduction in size or weight was possible within the existing configuration. Therefore, in 1956, the U. S. Army authorized the development of the T14 binocular.[1] The program objective was, and we quote, to "redesign the standard 7×50 M17 binocular and reduce its weight and bulk without impairing performance." This simple statement initiated the development of the present, sophisticated M19 binocular.

It was recognized from the beginning that the stated design goals did not address two of the more glaring problems, namely reliability and maintenance. The two most prevalent reliability failure areas were sealing integrity and interpupillary hinge wear. The maintenance problem had its basis in the quantity of individual spare parts, approximately 250, and special tools, approximately 125.

The concern for a design more compatible with maintenance was further spurred by facilities and personnel concerns and the fact that a binocular failure effectively removed the instrument from use for a period of three to six months.

Three alternatives were, therefore, subjected to both technical and financial analysis. They were:

a. Design a new binocular which required piece part maintenance but which met the size and bulk dictates and incorporated greater ruggedness and sealing capability.
b. Design a totally new binocular which could be economically discarded at failure. Reliability would be traded-off against cost to provide optimum financial return. Such a unit could be very effectively sealed after assembly and adjustment.
c. Design a totally new binocular which would be maintainable with the absolute minimum number of components, and without any special tools or skills.

This last option was chosen for technical investigation after considerable economic analysis.

Shortly after the determination of ultimate configuration the Frankford Arsenal awarded a development contract to Farrand Optical Company to translate the Army requirements into evaluation hardware. The result of the combined Farrand-Frankford effort was the T14 binocular.

The T14 binocular combined a number of new features and concepts which made it unique. The newly designed T14 was only

Invited paper OM-110 received Sep. 1980; revised manuscript received and accepted for publication Oct. 27, 1980. This paper is a revision of Paper 250-06 which was presented at the SPIE seminar on Optomechanical Systems Design, July 31, 1980, San Diego. The paper presented there appears (unrefereed) in SPIE Proceedings Vol. 250.

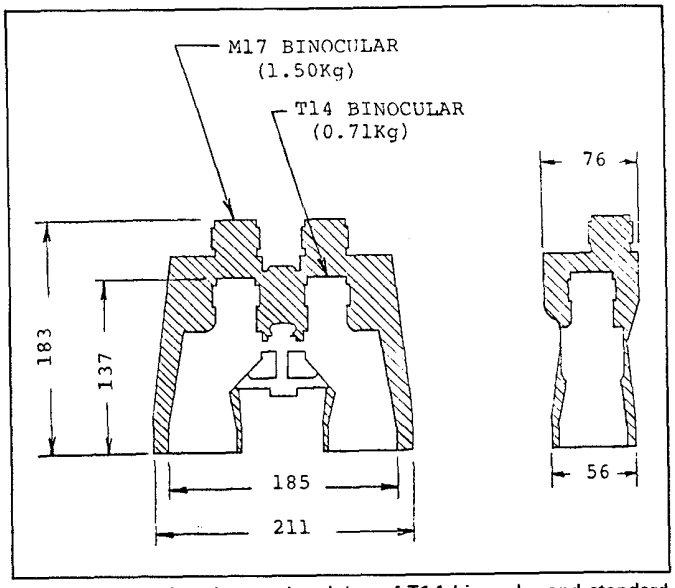

Fig. 1. Comparative sizes and weights of T14 binocular and standard 7×50 binocular.

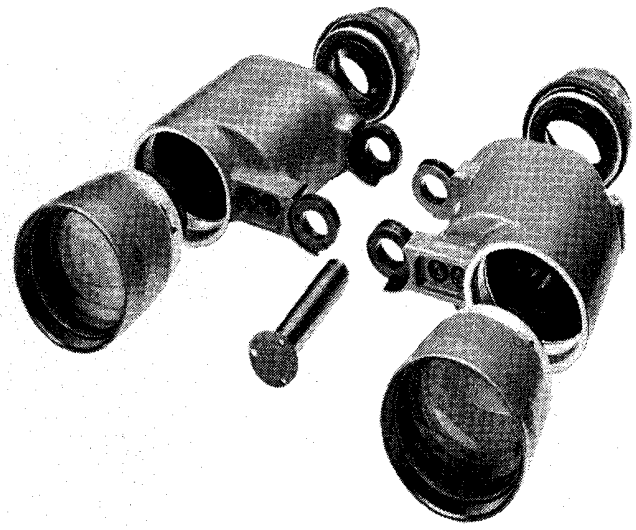

Fig. 2. M19 modular assembly.

48% as heavy and large as the standard issue 7×50 binocular, the M17A1, as shown in Fig. 1. Its optical performance was slightly superior. Furthermore, the T14 was the first practical binocular which was truly modular. The binocular consisted of five nonmaintainable modules: an eyepiece, an objective, a hinge pin assembly, and left and right body housings. The hinge pin assembly was manufactured to tight mechanical tolerances, and all of the other modules incorporated interfacing mechanical surfaces which were precisely machined to their unique optical focus and alignment. The objective cell and the eyepiece cell were sealed at their extremities with elastomeric seals. The diopter adjustment mechanism was sealed with a dynamic "O" ring and all interface surfaces were sealed with "O" rings. The cast magnesium body shells were fitted with covers which were adhesively secured. The binocular made very extensive use of magnesium to provide light weight and ruggedness. The T14 utilized the well-known dual porro prism arrangement in each telescope to provide for physical separation of the objectives, and hence some stereoscopic effect. The prisms received special design emphasis to insure both minimum weight and size. Since no prism maintenance was envisioned, the prisms were adhesively bonded together and to brackets which were mechanically fastened to the interior of the respective housings. The standard porro prism configuration was also slightly modified so that unnecessary material was removed from the normally parallel ground sides.

In order to increase the reliability of the standard friction hinge, a spring loaded ball and detent mechanism, which had no wear surfaces, was designed and incorporated.

Small quantities of the T14 were built by Farrand and tested by the U.S. Army through 1959 and 1960. The evaluations revealed several defects in the binocular design. Certain features, such as the ball and detent interpupillary mechanism, were universally disliked. The cast magnesium, which was extensively used to reduce weight, was not withstanding the severe military environment. Other deficiencies included paint blistering, extreme temperature sensitivity, optical alignment shifts, and isolated instances of moisture penetration. The several T14 binoculars which required repair were corrected by module replacement.

In essence then, the T14 had demonstrated the viability of optical module interchangeability as a maintenance concept for binoculars. The T14 also provided an optical system and various other features and concepts which would be utilized in the future.

In 1960, the Frankford Arsenal undertook the task of redesigning the T14 binocular. The design that resulted, called the T14E1, retained the desirable modularity and improved it. The T14E1, with the addition of detail changes, has become the M19.

2. MODULAR CONCEPT

The M19 is constructed of only five major, nonmaintainable modules as depicted in Fig. 2. (The interpupillary distance scale, which is part of the hinge pin assembly, and the neck strap are omitted from this figure.) The objectives, like the eyepieces, are twins which can be interchanged with any other like unit while maintaining collimation, focus, and resolving power. This is accomplished by the machining of pilot diameters and flange faces which are concentric and perpendicular to the individual cells' optical axes. The left and right body housings are similarly machined.

The objective subassembly copies, exactly, the telephoto design used in the original T14 binocular. The lens elements are mechanically mounted into a wrought aluminum housing. The housing is machined after assembly and sealing to provide the radial bearing surfaces and axial flange surfaces which guarantee that each is, within tolerance, identical.

The porro prism assemblies borrow from the design of the original T14. The first prism is bonded to a die cast aluminum shelf with the recently developed Army glass-to-metal adhesive. The second prism is then bonded to the first. The prism bonding sequences are controlled to minimize unwanted optical effects.

The body housings start as identical aluminum investment castings. They are given their left- or right-handedness at the initial machining stage. The eyepiece mounting surfaces are also machined at this stage. Final machining is accomplished after prism installation with the use of a master eyepiece to provide the radial and axial surfaces needed to interchangeably accept objectives. Purging ports are provided at the forward end of the housing and are closed by Philips head sealing screws.

There are several other M19 binocular features which are worthy of mention. First, and most obviously, the binocular uses fused vinyl coating wherever possible in lieu of the more traditional paint finishes or hand-glued vinyl. The coatings are exceptionally versatile. They are comfortable, easy to apply, and machinable. They cover minor casting surface defects which organic coatings would accent. Also the anodic coating which is normally applied to aluminum does not affect the vinyl.

The binocular eyepieces are individually adjustable for focus, without the hand fitting normally required to insure collimation. This is accomplished by moving the optical cell linearly rather than by rotation of the entire eyepiece. Sealing is accomplished throughout the linear range by a collapsible rubber bellows. The bellows has

proven itself to be more reliable than "O" rings. Also, the bellows does not require a deep, machined "O" ring gland which would have added weight to the instrument.

The binocular housings are of one-piece construction. The choice of this configuration virtually eliminated the option for die casting and left investment casting as the only viable option. This choice was not hastily arrived at, but was the result of tradeoff analysis which revealed that the assembly of two die castings was inherently more costly, less durable, and more prone to moisture absorption than a one-piece investment casting. The performance of the investment casting has been remarkable, and no further consideration has been given to other methods of construction.

Because of interchangeability requirements arising from the modular concept, tolerancing of the module interface dimensions was particularly critical. If a "worst case" approach were followed (i.e., assuming the variations in all modules to combine in the worst possible manner), tolerances of 0.005 mm would have been required. Such tolerances were not achievable in high volume production at acceptable costs. Instead, Frankford Arsenal conducted a Monte Carlo statistical analysis which demonstrated that larger, more attainable tolerances could be used and yet insure that all but the most unusual and low-probability combinations would meet rigid collimation requirements. It was this effort, more than any other, which made the modular M19 concept economically viable.

To date, many thousands of M19's have been used by the Army. The number of known failed instruments is less than twenty, and the predominant cause of failure has been unusually severe abuse. Of the instruments returned for evaluation, it was determined that the maximum cost of rebuilding was less than $75 and the time to rebuild was less than sixty minutes. All repairs could be conducted in any reasonably clean area by untrained personnel with simple hand tools.

The Army has conducted two studies of the M19 modular feature to assess the ultimate cost impact. The last study, conducted in 1974, concluded that the M19's modularity will save the U.S. Army over two and one-half times the binocular's initial acquisition cost over its service life. This study did not, and could not, assign a financial factor to the intangibles such as freeing up repair space for other instruments, the elimination of countless hours that go into purchasing, etc. The Army has recognized one possible problem with modularity. Since in Army supply channels binocular components are not as fully controlled as complete binoculars, it was feared that, piece by piece, an entire unit could be pilfered and reassembled with common hand tools. If this becomes a problem, the Army will not purchase both body housings as spare parts. An instrument with a damaged left housing will be written off of property lists and cannibalized for the repair of other units.

3. PERFORMANCE REQUIREMENTS

The key performance requirements specified for the M19 binoculars are identified in Table I. Of these, the most stringent from the viewpoint of production engineering are the ones pertaining to collimation. When applied to binoculars the term "collimation" refers to the parallelism of the output optical axes of the two individual monoculars in the horizontal ("divergence") and vertical ("dipvergence") planes when viewing a target at infinity.

TABLE I. M19 Binocular Performance Requirements

Characteristic	Specification Range
Collimation, minutes of arc	
Dipvergence	±15
Divergence	20±20
Resolution, seconds of arc	6 max.
Image Tilt, minutes of arc	30 max.
Parallax, image to reticle, mm	0.127 max.
Eyepiece focus, diopters	±4

Several possible sources of collimation error are illustrated in Fig. 3. The magnitude of each deviation which would cause a collimation error of one minute is indicated. It is apparent that the required tolerances are very demanding for optical instruments which are to be manufactured in large volumes.

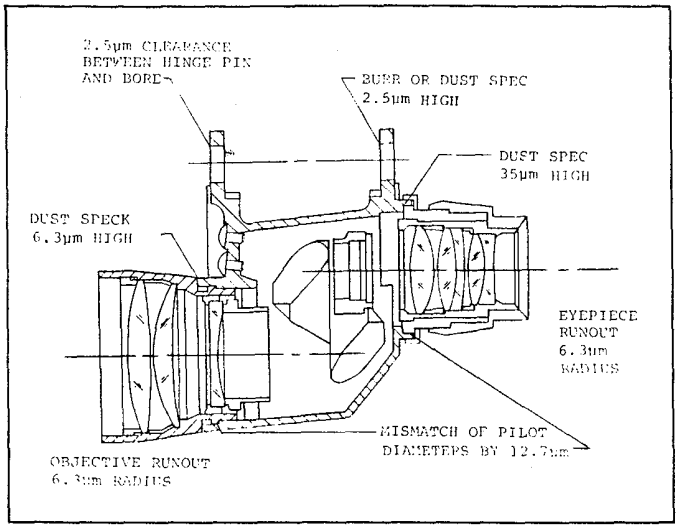

Fig. 3. Sources of one minute collimation error.

The requirement that all modular subassemblies had to be totally interchangeable and field-replaceable without adjustment severely compounded the production problem. This precluded such normal assembly practices as selective assembly, adjustment of collimation after assembly, etc. The object was to fabricate objectives, eyepieces, and body housings by random assembly and then to machine very precisely the mounting interfaces. This required sophisticated optical alignment techniques to position the subassemblies in holding fixtures prior to machining, followed by precision machining on numerical control (NC) equipment. These aspects are discussed in following sections.

4. PRODUCTION ENGINEERING APPROACH

Broadly speaking, the goal of production engineering is to plan and implement a sequence of manufacturing processes and operations such that a quality product is produced in accordance with a predetermined delivery schedule at reasonable cost. For the M19 binocular, the quality requirements were defined by a government-furnished drawing package and a military specification delineating required performance levels and test methods for specific optical and environmental resisitance characteristics. Adherence to this specification was rigidly enforced by Bell & Howell's quality assurance organization and by resident U.S. Government inspectors. The delivery schedule was, of course, specified by contract document. The fixed price contract was awarded to Bell & Howell after competitive bidding. Therefore, demanding cost targets had to be met to insure profitable operations.

4.1. Approach

Following detailed analysis and investigation, the approach to this optical production engineering problem was defined as follows:

A. Modules to be produced as pre-collimated, pre-focused interchangeable subassemblies.
B. Machining of optical mounting surfaces of modules to be done after assembly and sealing of the module to maintain concentricity and flange focal lengths.
C. Sophisticated tooling and machining approaches, using optical alignment extensively, to be used to obtain the required precision in conjunction with low unit cost, high yield, and high throughput.
D. Simple, fast, and accurate means for optical testing of critical

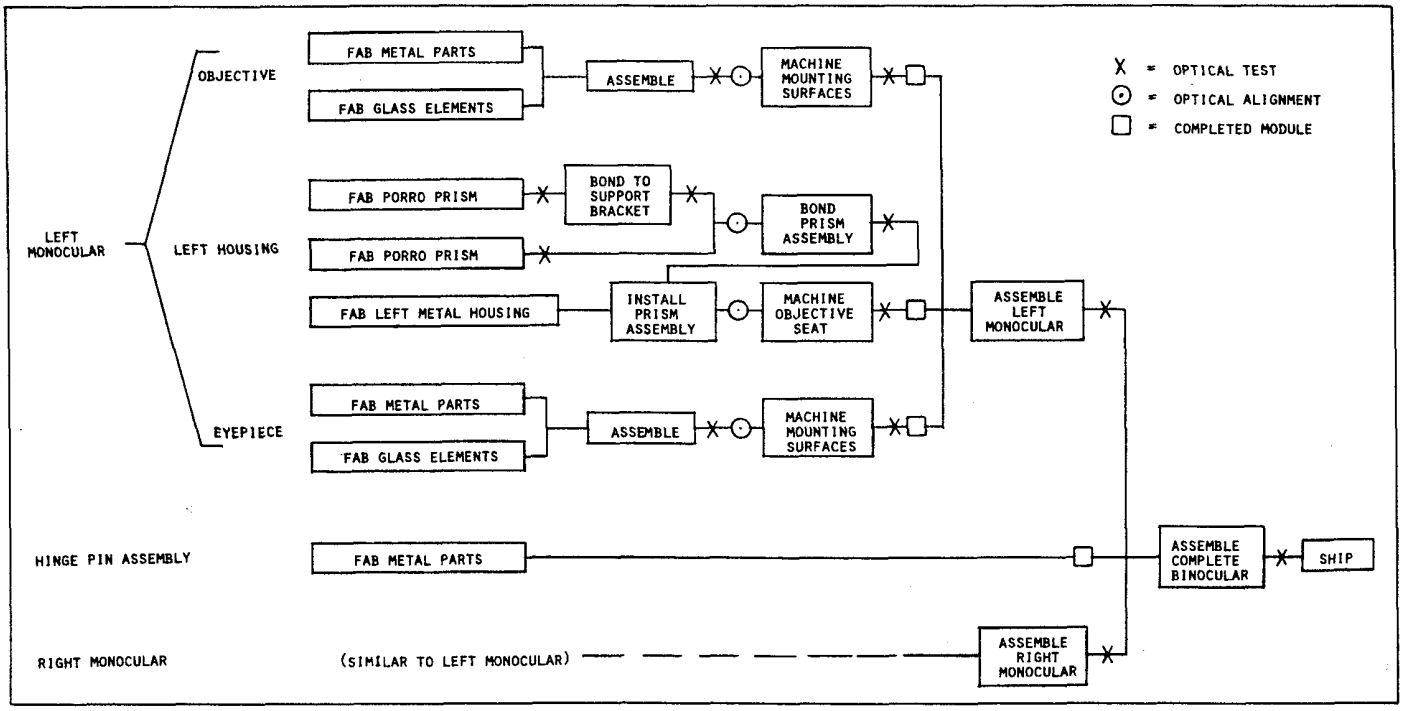

Fig. 4. Simplified production flow diagram for M19 binocular.

components, modules, and binocular assemblies to be developed.

E. Tolerance studies to be conducted in order not only to meet specifications but also to improve quality. Where appropriate, piece tolerances to be reduced to preserve greater tolerance margins for subsequent operations.

4.2. Production flow diagram

An extremely simplified production flow diagram for the M19 binocular is presented in Fig. 4, in order to convey a general understanding of the production sequence. The fabrication and assembly process for the left monocular is broken down into gross detail, showing the objective, left housing, and eyepiece modules. (The left and right housings differ only in the detail machining of their common base casting and in the left housing's having a reticle etched on the plano lens surface at the intermediate image focal plane.) The numerous points in the manufacturing process at which optical tests and optical alignments are carried out are denoted by coded symbols in Fig. 4.

It should be noted that no alignment or adjustment is done after a monocular is assembled, or after a complete binocular is assembled. To do so would violate the concept of accomplishing field maintenance be merely replacing modules without needing any alignment or adjustment.

5. PRODUCTION ENGINEERING IMPLEMENTATION

Some of the specific problems encountered in implementing the planned production engineering approach, and the methods developed to solve them, are considered below.

5.1. Housing modules

Manufacture of the housing modules provided the greatest challenge. Each housing module consists of the housing itself plus the porro prism assembly which is installed inside, as was indicated in Fig. 4. Considering first the prism assembly, the support bracket is die cast aluminum, machined to close tolerances with a wall thickness as small as 0.254 mm in one critical area. The two glass prisms are identical, with the first prism cemented to the support bracket and the second prism then cemented to the first.

As is often the case, maintaining optical alignment and structural integrity after the cementing operations proved difficult. The adhesive originally specified as the metal-to-glass bond between the support bracket and the first prism was found to produce low yields. Fortunately, later development by Frankford Arsenal provided an adhesive (identified as Summers Milbond or Mil-A-4866 adhesive) permitting substantial reduction in curing temperature and holding pressure requirements to achieve good adherence. Production yields increased markedly due to reduced mechanical and thermally induced strains in the cemented assembly. However, multiple precision fixtures to align and hold the prism to the support bracket still were required, as shown in Fig. 5. These fixtures were built to

Fig. 5. Prism-to-support bracket cementing fixture.

exacting tolerances and had to be carefully maintained to hold the required positioning.

Securing and retaining proper alignment for the glass-to-glass bond between the first and second prisms as a high-production process also was troublesome. The rather complex optical alignment system pictured in Fig. 6 was developed as the prism setting apparatus. Ultraviolet-curing cement (Norland 61) is applied to the prism interfaces and the prism cluster assembly, in an interchangeable combined setting and curing fixture, is inserted into the alignment apparatus. The second prism must be positioned with respect to the first prism (and attached mounting bracket) such that input and output axes are parallel ("pointing") and displaced by the proper distance. In addition, rotation of the image around the optical axis ("tilt") must be controlled closely. A video camera and monitor are used to display to the operator pointing and tilt relationships for the prism assembly. The operator first adjusts the free prism laterally until the image of a reticle projected through the system is positioned within a prescribed rectangular tolerance envelope on the monitor screen. Then, while maintaining the image inside this rectangle, the prism is rotated slightly to align tilt reference indicators also displayed on the monitor screen. The prism is then clamped in position in the fixture. Curing of the cement takes place under a bank of ultraviolet lamps adjacent to the setting station. Multiple setting/curing fixtures are necessary to support the required production rate. After curing, the same optical alignment apparatus is used as a test device to insure that the desired prism setting was retained through the curing process.

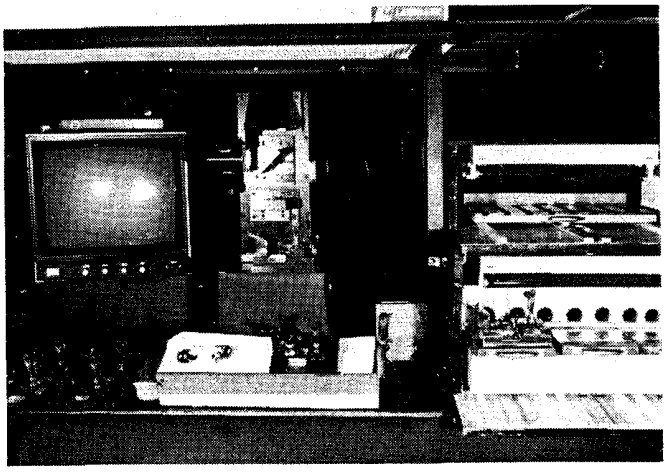

Fig. 6. Prism-to-prism setting system.

Turning now to the housing itself, this is a thin-walled, vinyl-clad aluminum investment casting. The wall thickness is nominally 1.524 mm. Over this, 0.381 mm of soft vinyl is applied prior to machining of the critical mounting seats for the eyepiece, the prism assembly, and the objective. The locations for the eyepiece and prism assembly seats were established mechanically during the machining process. Normally, with a rigid, stable part, these would not have presented unusual problems despite the fact that very demanding tolerances were required. However, the structural flexibility of the thin-walled housing was a serious handicap. In addition, due to the soft vinyl, it was not possible to locate reliably from any of the vinyl-clad surfaces or to clamp on them without cosmetic damage. Elaborate fixtures relying upon a few previously machined surfaces which were not vinyl clad had to be developed before acceptable production yields and rates were attained.

The final machining operation on the housing is for the objective mounting seat, which must be located by optical alignment prior to machining. Before this, however, the prism assembly described above is installed, properly located to insure adequate material allowance on the objective housing seat for final machining, and secured in place.

Final machining of the housing with the prism assembly installed was the critical step in obtaining the module precision required to permit interchangeability. Collimation requirements (divergence and dipvergence) of the optical axis with respect to the hinge pin centerline were such that the bore for the objective had to be properly located within 0.0127 mm, and the requirement for perpendicularity between the objective seat and the optical axis was 0.0051 mm. In addition, the objective seat had to be located axially to obtain the proper flange focal distance. To obtain these accuracies, it was necessary to use optical alignment techniques to position the housing for machining. The machining approach which was tried initially was to optically align the housing directly on the lathe, with a hollow lathe spindle being used to permit passage of the light beam. After a considerable development effort this approach was abandoned. Alignment was very difficult and time-consuming. This meant that the machining tool was being used inefficiently. Only a fraction of its available time was actually being used for machining, with the machine being unproductive during the alignment task. This was unacceptable for high volume production.

The production machining concept that was finally developed was to hold the housing in a transferrable setting/machining fixture. The housing initially would be positioned by optical alignment and locked in place on the fixture at an off-line setting station. Then the fixture would be transferred to the spindle of a numerically controlled multi-tool lathe for final machining. Multiple transferrable fixtures would be provided so setting and machining could proceed in parallel.

The fixture and the optical alignment technique used at the setting station are shown schematically in Fig. 7. The fixture base is designed to mate precisely with the lathe spindle such that the fixture centerline (CL) is coincident with the rotational axis of the spindle during machining. Therefore, the mounting seat for the objective will be machined concentric with the fixture centerline.

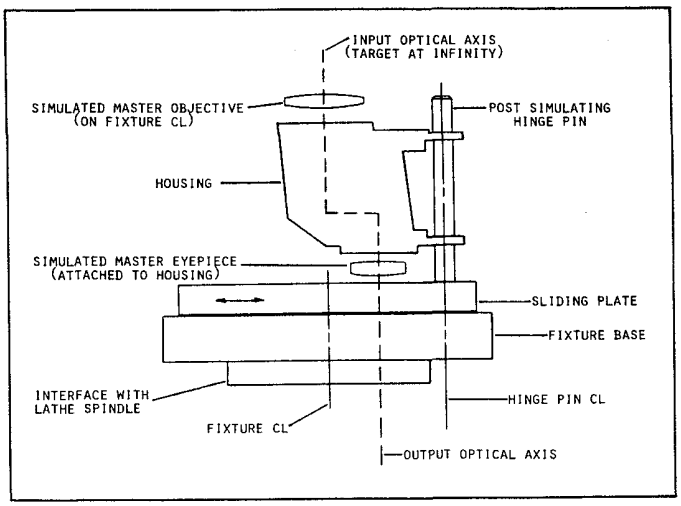

Fig. 7. Housing optical alignment schematic.

Atop the fixture base is a sliding plate which can be translated laterally. This plate carries a post simulating a binocular hinge pin. The CL of this post is always parallel to the fixture CL. This post is the basic mechanical reference for mounting the housing to the fixture.

An optical system in the setting station, not shown in Fig. 7, provides an image of a target at infinity along the input optical axis which is made coincident with the fixture CL. A simulated master objective is mounted at a fixed location in the setting station and centered on this axis. This objective forms an image of the target at an image plane inside the housing. This image is then viewed through a simulated master eyepiece (temporarily attached to the housing) by a video camera, with the output being displayed on a video monitor. The proper flange focus position for machining the objective lens seat in the housing is obtained by moving the housing vertically along

the hinge post until best focus is obtained on the video monitor. The housing is then clamped to the post and sliding plate in this position. Axial positioning of the housing on the fixture now has been completed, but lateral adjustment to obtain collimation is still needed. In other words, the depth to which the objective mounting seat will be machined has been defined, but not the lateral positioning of the seat.

The collimation requirements for the monocular are that the output optical axis be parallel to the hinge pin CL within ±5 minutes in the dipvergence plane (normal to the page in Fig. 7) and be diverging between 5 minutes and 17 minutes in the divergence plane. Due to parallelism between hinge pin and fixture CLs, the collimation requirement may be referenced to the fixture CL equally well.

This approach is used at the setting station. After focus adjustment, the housing and sliding plate assembly is adjusted laterally (in two directions) with respect to the fixture base and the simulated objective until the required collimation conditions are achieved. This is indicated by a predetermined positioning of the target image on the video monitor. When this is achieved, the sliding plate is locked to the fixture base and the assembly transferred to the NC lathe for machining of the objective mounting seat. A photograph of the setting station, with a fixture and housing in place, is shown in Fig. 8.

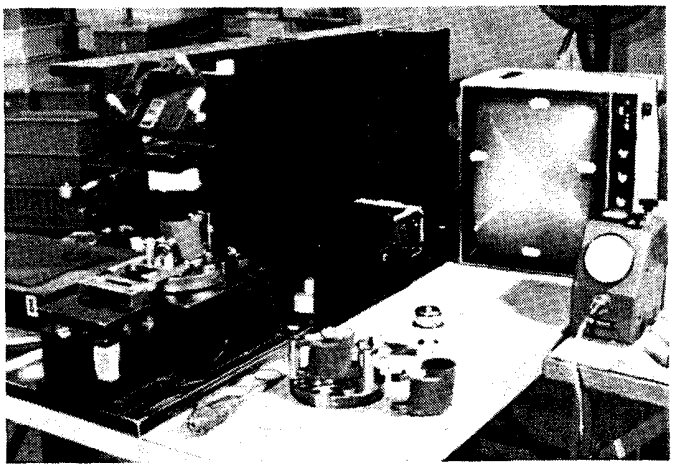

Fig. 8. Housing optical setting station.

A great amount of production engineering was needed to optimize the housing machining operations. The fixure, of course, had to support the housing rigidly so that the required tolerances could be held despite the poor positional stability of the thin-walled, vinyl-clad irregularly shaped part. In addition, it had to be mass-balanced to rotate without vibration on the lathe spindle. Means were provided to seal the interior of the housing, containing the prism assembly, against coolant and chips during machining. Feeds, speeds, and coolants to be used during machining had to be optimized. Figure 9 is a photograph of the actual machine setup.

5.2. Objective module

Like the housing, the objective module also had critical dimensions which had to be held within close tolerance limits to permit modular interchangeability while maintaining binocular collimation and focus. Concentricity between the mounting diameter and the optical axis had to be held to 0.010 mm, while the tolerance of flange focal distance was 0.038 mm.

Again the production concept used was to completely assemble the objective and machine its mounting surfaces after assembly. The semifinished assembly has all components installed and sealed in place. Then it is purged, back-filled with dry nitrogen, sealed, and tested and is ready for the final machining operation which makes optical and mechanical centerlines coincident and establishes the correct flange focal length.

A setting/machining fixture is used which is transferable between an optical setting station and the lathe spindle. At the setting station

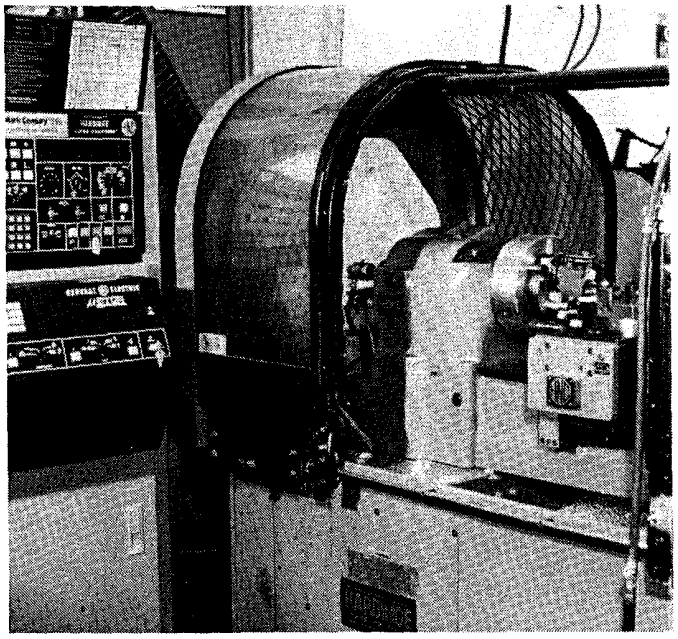

Fig. 9. Housing final machining.

the optical axis and focal point of the objective module are identified and properly positioned with respect to fixture references using video monitor readout. Then the objective is locked in place and the fixture is transferred to the lathe for final machining. This operation is illustrated by Fig. 10. Multiple transfer fixtures are used to support the required production rate.

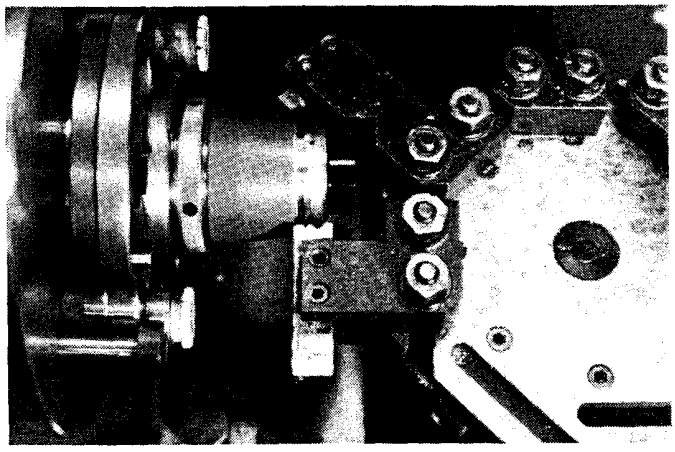

Fig. 10. Objective final machining.

5.3. Eyepiece module

The eyepiece module presented additional problems in manufacture. The eyepiece had to be translatable axially with respect to the housing module to permit focusing and diopter adjustment to suit the user's eyes. Pointing change or "wander" of the optical axis with respect to the mechanical axis is a potential problem in almost every optical assembly which is adjustable for focus, and the eyepiece module proved to be no exception. Extremely thin walls provided additional challenges to the production engineers when manufacturing concepts were being formulated and developed.

A transfer fixture concept, quite similar to that for the objective module, was used to hold the eyepiece during machining. However, in early pilot runs it was found impossible to maintain in the thin-walled parts the tolerances required to avoid pointing shift during focusing.

The ultimate solution to this problem was a binocular design modification which was proposed by Bell & Howell and accepted by the Army. This change provided for a spring preload within the eyepiece assembly which minimized the effect of moving components. The spring furnished a biasing force which kept the same mating surfaces in contact regardless of the direction of the motion.

6. CONCLUSIONS

The end product of the effort described above, the completely assembled M19 binocular, is pictured in Fig. 11. The binocular is 152 mm long, 190 mm wide in the open position, and weighs 0.97 kg.

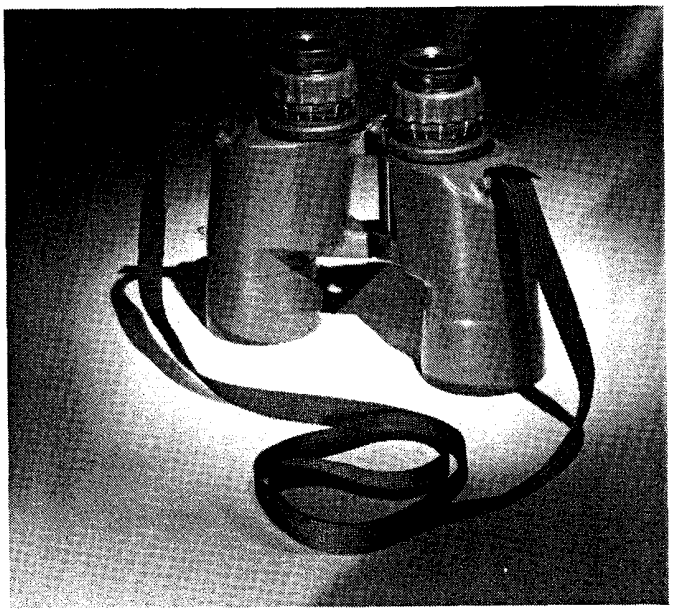

Fig. 11. Assembled M19 binocular.

Conclusions which can be drawn as a result of the M19 binocular production engineering effort are as follows:

1. The interchangeable module concept for the M19 binocular is producible, and should be considered for application to future optical instruments.
2. Machining complete optical modules (e.g., objective, eyepiece, monocular housing) after random assembly of components is an effective way to maintain optical/mechanical axis concentricities and focal locations without selective assembly.
3. The transfer fixture concept of optically aligning an assembly on a fixture at a setting station and transferring the assembly fixture combination to a precision machining station is valid and necessary to support high production rates.
4. Use of video cameras and monitors as readout devices for optical alignment systems markedly reduces operator fatigue and improves accuracy, reliability, and throughput.
5. Optical instruments having very demanding tolerance requirements can be produced effectively in large volumes (2000/month) if proper manufacturing concepts, processes, and equipment are developed and applied.
6. Extensive Quality Control and Quality Assurance efforts are necessary because of the precision requirements. One-hundred percent inspection is maintained at the binocular and module levels, and also at many critical subassembly and component levels.
7. Large initial investments in capital equipment and preproduction tooling and development costs are necessary to implement this manufacturing concept successfully. Bell & Howell has invested $2,500,000 in specialized capital equipment to support the unique requirements of the M19 program. Once this investment is made, however, unit production costs are minimized.

7. REFERENCES

1. Yoder, P. R., Jr., J. Opt. Soc. Am. 50(5), 491-493(1960).