Lens barrel optomechanical design principles

M. Bayar “Lens barrel optomechanical design principles” Optical Engineering 20(2)[1981]

Synopsis by:
Jennifer Harwell
November 1, 2010
University of Arizona, Tucson

Abstract
Both the optical properties of the system design as well as the mechanical properties of the lens mount must be addressed when designing an optical system. The optomechanical engineer becomes the crucial link in assuring the tolerances of both categories are met, taking into consideration all environmental changes such as temperature fluctuation, system vibrations, material stress and strain, element tilt and decenter, as well as air spacing between lens elements. This document provides a synopsis of the technical paper written by Mete Bayar[1] of Pacific Optical in 1981 which addressed the issues above as applied to the design process of a lens barrel.

Introduction
Optical systems are becoming more complex and sophisticated in order to respond to the increasing demand for high quality performance. The lens barrel, defined as the “mechanical structure holding a complete lens[2],” must be designed to maintain the integrity of the lens system.

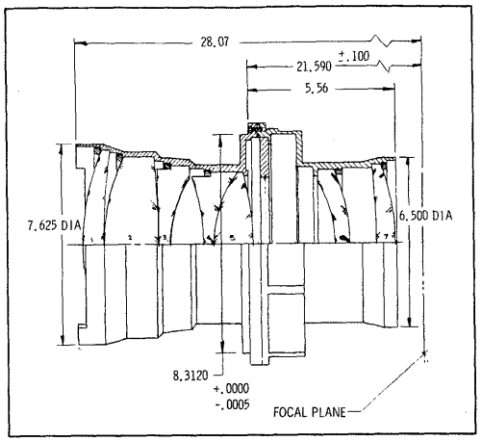

Figure 1: Cross section of a lens system[1]

Adding a lens barrel induces stress and strain to the lens elements in a variety of ways. Typically the lens barrel is not made out of the same material as the optical element, therefore a change in temperature will cause the materials to expand and contract in different ways. A variety of materials can be chosen to minimize thermal expansion; however tradeoffs between performance, weight, cost, and manufacturability must be made. The contact surface of the lens

barrel at the edges of each lens element will also cause stress and strain in the lens element. Three types of radial constraints used to attach the lens element to the barrel, including hard mounting, drop-in mounting, and elastomeric mounting will be explored. Retainer rings, snap rings and spun rims are used to ensure the element spacing is maintained. All of these constraints can affect the tilt and decenter of each element relative to the lens system, potentially degrading the quality of the overall optical system. Finally, the cements and adhesives used to secure all elements must be chosen to ensure the optical system will maintain good performance in all anticipated environments.

Material Properties

Choosing a material for the lens barrel is an essential step in preserving the optical and mechanical integrity of the lens system both under operating and nonoperating environmental conditions. The difference in material expansion due to thermal conditions between the lens element and the lens barrel must be well understood. Also, the material reaction to shock and vibration in the optical system is important. A force from the lens barrel will need to be applied to minimize the axial and radial stresses during thermal extremes. This force may need to be large to ensure axial and radial alignment during stress and vibration, therefore the ultimate strength of the glass must also be known to prevent a fracture in the lens element.

Metal/Glass	Density (lb/in^3)	Coefficient of Expansion (10^{-6} in/in°F)	Modulus of Elasticity (10^6 lb/in^2)	Thermal Conductivity BTU/ft-hr-°F
Aluminum	0.097	13.3	10	128
Stainless steel				
Austenitic (316)	0.29	8.9	28	9.4
Martensitic (416)	0.28	5.5	29	14.4
Beryllium	0.067	6.4	40	92
Titanium Ti-6A1-4V	0.164	4.9	16	10.1
BK-7	0.090	3.94	11.8	—
SK-16	0.129	3.5	12.9	—
SF-5	0.147	4.5	8.15	—
PSK-53	0.129	5.2	11.16	—
KzFS-1	0.124	2.78	8.0	—

Table 1: Material properties for common metals and glasses[1]

The table above highlights some of the important material properties of common metals and glasses. Metals are not the only materials that can be used to manufacture a lens barrel, however Bayar chose only the predominantly used metals of the time to discuss. These include aluminum, stainless steel, beryllium, and titanium. The most common aluminum alloys are 6061-T6 and 2024-T4. Although aluminum has a large thermal expansion coefficient compared to that of glass which can cause image degradation and breakage, its low cost, easy machinability, high conductivity and light weight make this material a popular choice among optomechanical engineers. When the thermal requirements are stringent, stainless steel can be used instead of aluminum because its thermal expansion coefficient is much closer to that of typical glasses. Stainless steel is also very resistant to corrosion. On the other hand, stainless steel is difficult to machine and is about three times heavier than aluminum. Beryllium is popular due to its low density, high stiffness and low thermal expansion coefficient. Unfortunately, it is a hazardous material and must be machined in an environment with highly efficient exhaust systems to minimize dust concentration. Finally, titanium is a good mechanical material because of its thermal expansion coefficient is close to glass, low density, and yields itself to grinding and

lapping operations. The disadvantages to using titanium include its low thermal conductivity, high cost and difficult machinability. Material cost, availability, and machinability are all factors that need to be considered and tradeoffs may be necessary when choosing the right lens barrel material.

Element Mounting Techniques

A detailed tolerance analysis by the optical engineer is done prior to the lens barrel design to determine the sensitivities of each element to variations in airspaces, center thicknesses, radii of curvature and decentration. The mechanical engineer then designs a lens barrel that will meet each of the design tolerences while maintaining low stress and strain. The lens barrel constraints can be separated into two categories: radial constraints and axial constraints.

Radial constraints are used to control the tilt, decenter and position of each lens element. Many techniques are used, including hard mounting, drop-in mounting, and elastomeric mounting. Hard mounted elements are radially positioned by the inside diameter (ID) of the lens barrel. The axial positioning is accomplished by cutting the seats during assembly. The outside diameter (OD) of the lens element must be ground while the ID of the lens barrel must be machined so the optical axis cannot be displaced by more than a predetermined tolerance. Accurately determining the material expansion is a key element to the design because the induced stresses to the lens element can cause birefringence and image degradation. The radial stress in Figure 2(a) is a function of the temperature differential, coefficient of expansion, modulus of elasticity, element radius, and barrel wall thickness. The advantage to hard mounting is that the lens element will maintain its position within tolerance under shock, vibration, and change in temperature. However, because the seats are cut during assembly, the lens barrel must often be heated to create sufficient clearance to install the elements during assembly.

Drop-in mounting is similar to hard mounting because the elements are held into place by the cell walls. The seats are not cut during assembly; they are premachined within the prescribed tolerances. This technique is especially good for small lenses that do not require extreme accuracies.

Elastomeric mounting positions the lens element by radially adjusting the lens in the barrel until it is centered with respect to a reference shoulder on the lens barrel. Once centered, the gap between the ID of the lens barrel and the OD of the lens element is filled with an elastomeric room temperature vulcanizing (RTV) compound. A retainer ring is used to adjust the axial position of the lens element. Figure 2(b) gives the equation to determine the optimum RTV thickness for thermal compensation. If the thermal expansion coefficient of the barrel matches that of the glass, the RTV thickness is minimized.

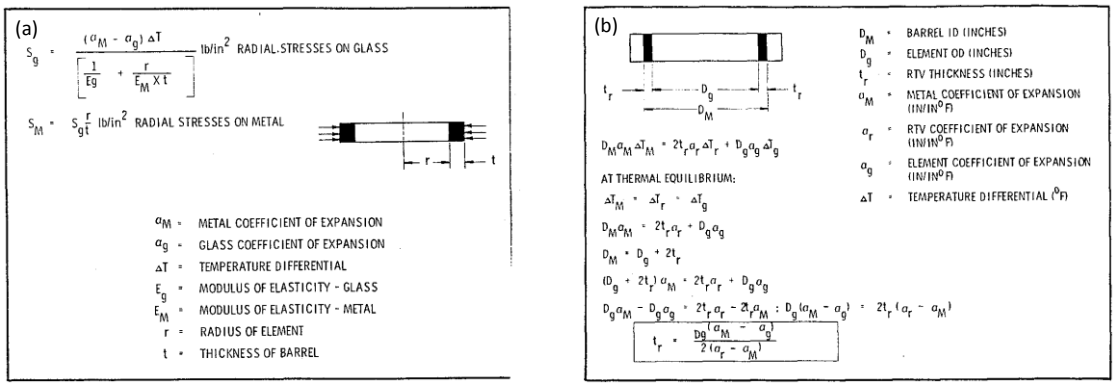

Figure 2: (a) Radial Stresses and (b) Method to determine the optimum RTV thickness[1]

The advantages of elastomeric mounting include strain-free mounting, accurate element alignment during assembly, and relatively loose element edging and metal bore tolerances. However, the particular RTV compound must be selected to minimize outgassing and disassembly of the system is difficult in order to make slight adjustments to optimize performance, Figure 2(b).

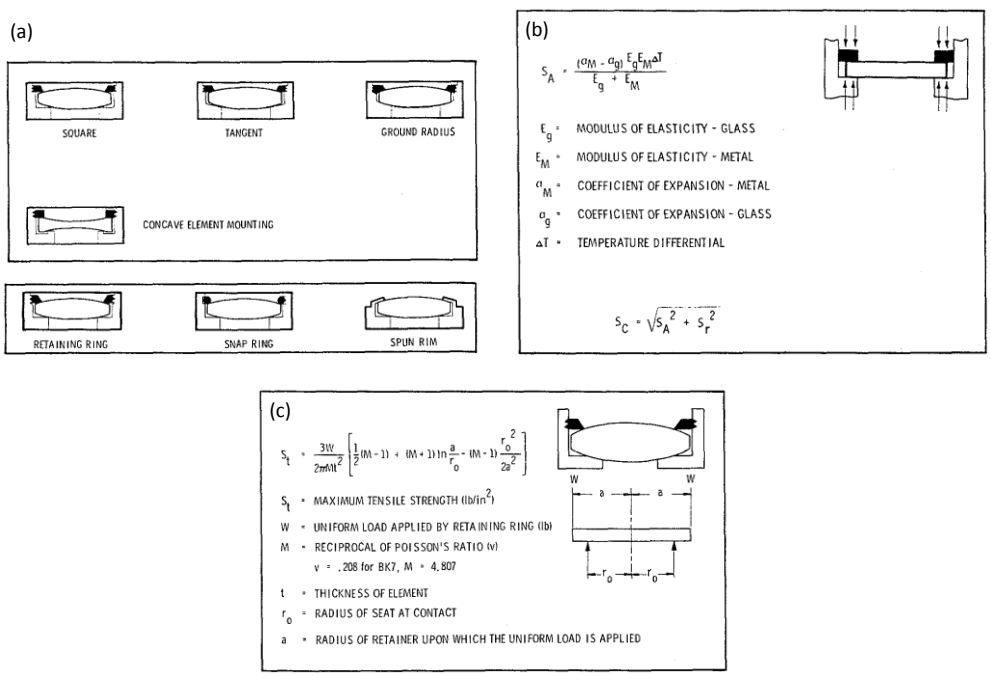

Figure 3: (a) Axial constraints and configurations (b) Axial stresses (c) Bending stresses

Axial constraints are used to preserve the proper airspacing between elements and to maintain centration after alignment. Retainer rings, snap rings, and spun rims, shown in Figure 3(a), are used to constrain the lens elements against their respective seat. In high performance

applications, threaded retainer rings are the most common form of axial constraints, therefore Bayar limited his discussion to retainer rings. To select the optimum seat configuration, the axial compressive stresses for a given temperature must be calculated, Figure 3(b), for glass and must be within acceptable limits. Square seats are the most common because they are easy to machine, however when axial stresses need to be minimized the seat can be machined tangent to the element or have the same radius of curvature. The element should be mounted against a spherical surface when possible so the center of curvature of the element will be along the same axis as the seat. To minimize bending moments, the line of contact of the seat must be directly opposite the line of contact of the retainer ring. Figure 3(c) can be used to calculate the bending moments assuming the edge-supported plate is flat with a uniform load on the concentric circular ring. It may be necessary to lap the seat so the element is not resting on high spots that bend the element and reduce the surface accuracy. Finally, the tightening torque applied to the retainer ring must be minimized while maintaining the shock and vibration tolerances.

Miscellaneous Considerations

Many sophisticated optical designs use cemented doublets to correct aberrations within the system. Cement choices become especially important when the thermal requirements are extreme or exotic glass types with large differences of thermal expansion coefficients are used. Good results may be obtained by using epoxy cements, however the only way to know a cemented doublet will meet specifications is by testing it. When cementing glass elements to the metal lens barrel, different cements should be used. Recall that stainless steel should be the material of choice when the thermal requirements are high.

Many military applications require sealed lens barrels. Passages must be provided between air spaces to ensure complete purging between the elements. If the lens system has more than one cell, the interfaces must be sealed, typically with “O” rings. A leak rate analysis must be completed taking into account the permeability of the seal materials. If a casting is used, its porosity must be controlled.

Developments

Many optomechanical engineers use Bayar’s calculations for the thickness of the RTV compound securing the lens element in an elastomeric mount, Figure 2(b), to estimate the thickness of their bonding agents for an athermal bond[3,4]. However, Christopher Monti[5] brought attention to the limitations of Bayar’s solution. Bayar ignored the affects of constraining the elastomeric bond axially and tangentially, only considering radial thermal expansion. Bayar also requires the thermal expansion coefficient of bond material to be the largest, followed by the barrel material and then the lens element. For common materials, this criterion is easily met. Because Bayar considers the stresses to be zero in the axial and tangential direction, the bond layer is free to expand or contract in those directions and the Poisson ratio is equal to zero. Typical materials have ratios that are much greater than zero; therefore Bayar’s calculations generate unrealistic values for ideal bond thicknesses where the lens element has a

circumferential bond within the supporting barrel. Figure 4 below illustrates the potentially large departure of the calculated athermal bond thickness from other methods.

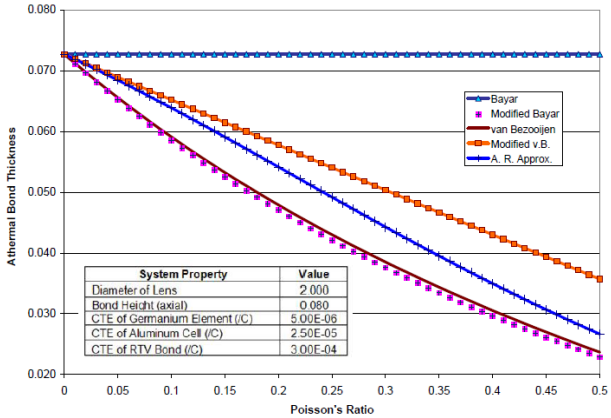

Figure 4: Comparison of results for a sample system from the Bayar, modified Bayar, van Bezooijen, modified van Bezooijen, and aspect ratio approximation solutions for athermal bond thickness.[5]

Although other methods calculate significantly smaller bond thicknesses as the Poisson ratio increases, Bayar's method can be used as a good approximation for an upper limit to the bond thickness in a highly segmented system. This would be appropriate for applications where the optical element was surrounded by small cylindrical pads of bond material. Monti develops the theory behind the other methods presented in Figure 4, however these methods will not be described here.

Conclusion

An optomechanical engineer is responsible for taking into account all factors of mounting a lens system that may introduce stress and strain in a lens element and degraded image quality. These factors include, but are not limited to, the expansion properties of the lens system materials, material density, thermal conductivity, machinablity, material cost, induced stress and strain from the lens mounting method both radially and axially, adhesive and cement material properties, and seal leakage rates. Many times the overall tolerances can be very tight and a careful analysis becomes essential.

References

[1] M. Bayar "Lens barrel optomechanical design principles" Optical Engineering 20(2)[1981]

[2] MIL-STD-1241A – *Optical Terms and Definitions*, March 31, 1967

[3] Hag-Yong Kihm, Ho-Soon Yang, Il-Kweon Moon, and Yun-Woo Lee, "Athermal Elastomeric Lens Mount for Space Optics," J. Opt. Soc. Korea **13**, 201-205 (2009)

[4] George Jacoby, Ming Liang, David Vaughnn, Rich Reed, Taft Armandroff, "A New Wide-Field Corrector for the Kitt Peak Mayall 4-m Telescope," Proc. SPIE, Vol. 3355, 721 (1998)

[5] Christopher Monti, "Athermal bonded mounts: Incorporating aspect ratio into a closed-form solution," Proc. of SPIE, Vol. 6665, 666503 (2007)