Kinematic & Quasi-Kinematic Constraints: What They Are & How They Work

A Presentation by

Dave Fellowes

Outline

- Background
- Kinematic Constraints
  - Detailed Description
  - Advantages & Disadvantages
  - Example
- Quasi-Kinematic Constraints
  - Detailed Description
  - Advantages & Disadvantages
  - Example

Background

- Free Space: Six Coordinates
  - Translation: x, y, z
  - Rotation: yaw, pitch, roll
- Kinematic Constraint:
  - All 6 Constrained Fully
  - No Over-constraint
- Quasi-kinematic Constraint:
  - Some Over-constraint Allowed

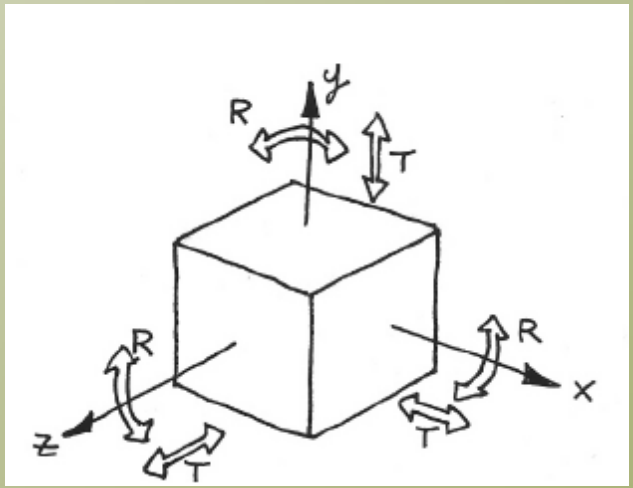

Background

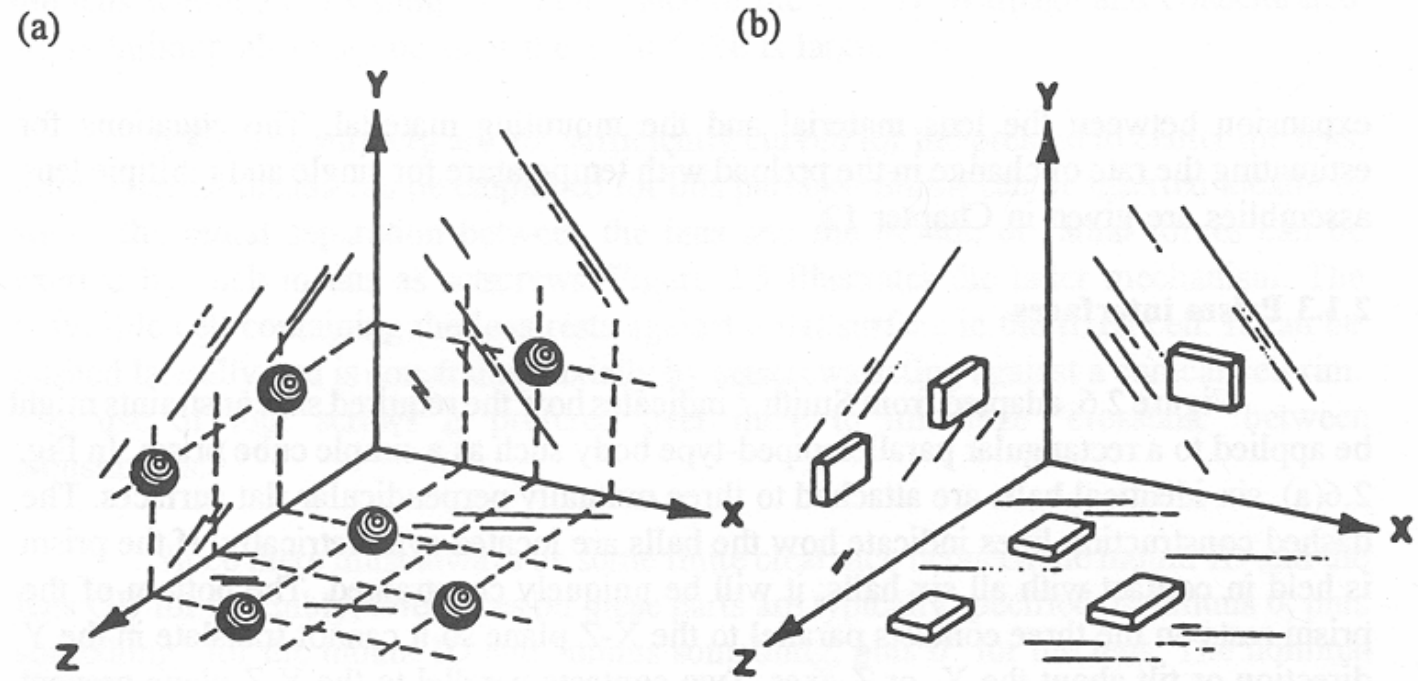

Fig. 2.6 (a) Kinematic and (b) semikinematic position-defining registration surfaces intended for interfacing with a cube-shaped prism (not shown). (Adapted from Smith.[3])

Kinematic and Quasi-kinematic Constraints

Kinematic Constraints: Description

- Six Point Contacts Required
- Each Contact Constrains one DOF
- Under-constraint (one or more DOF not constrained)
- Over-constraint
- Preloading
  - Not a constraint
  - Allows constraint to be functional

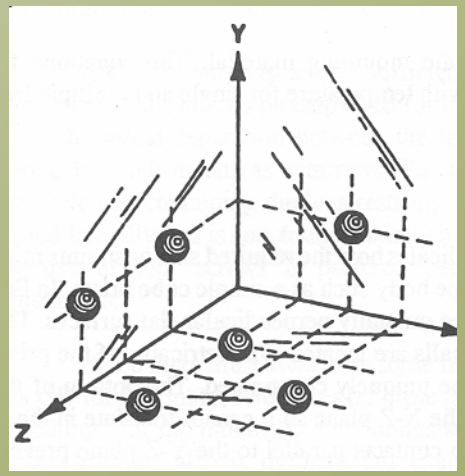

Kinematic Constraints: Description

- 3 Ball/1 Cone/1 Groove/1 Flat System

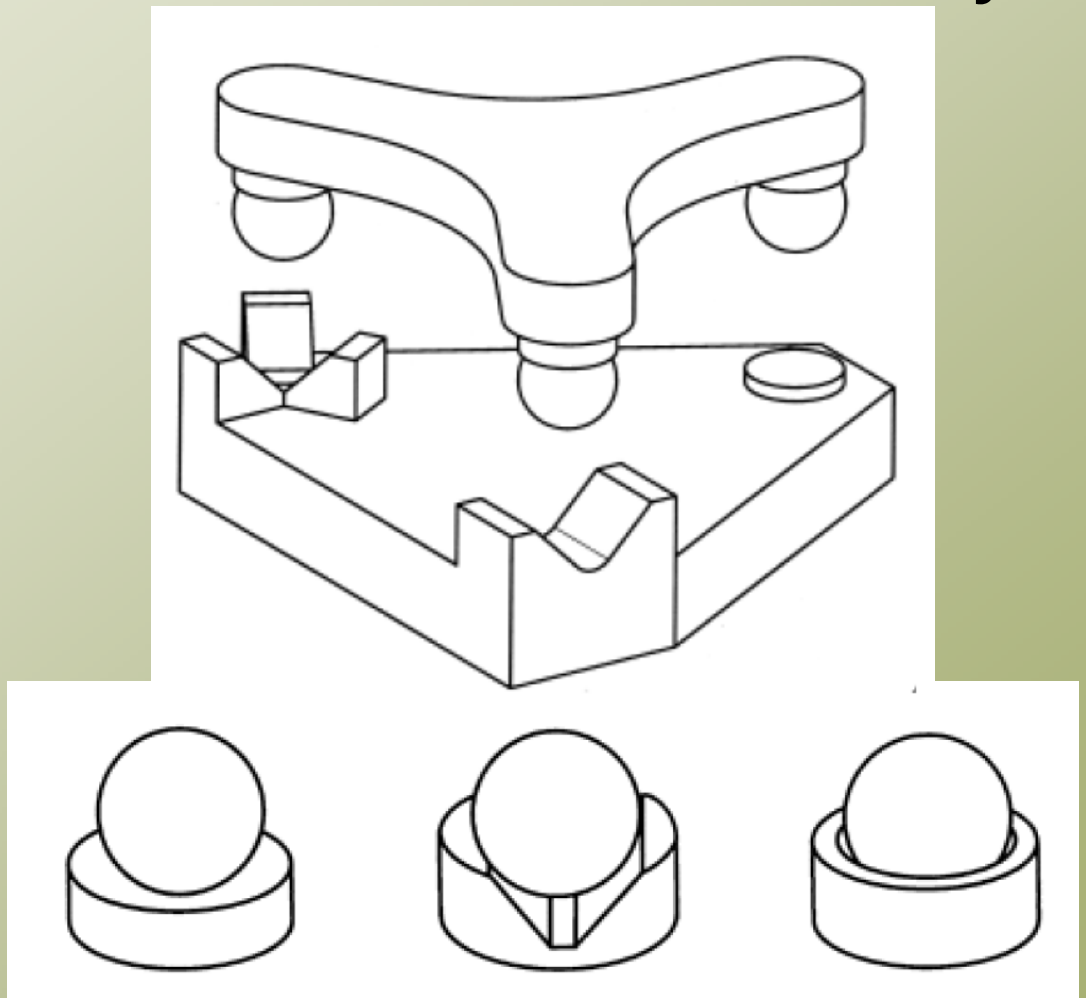

Kinematic Constraints: Description

- 6 Point/3 Groove System

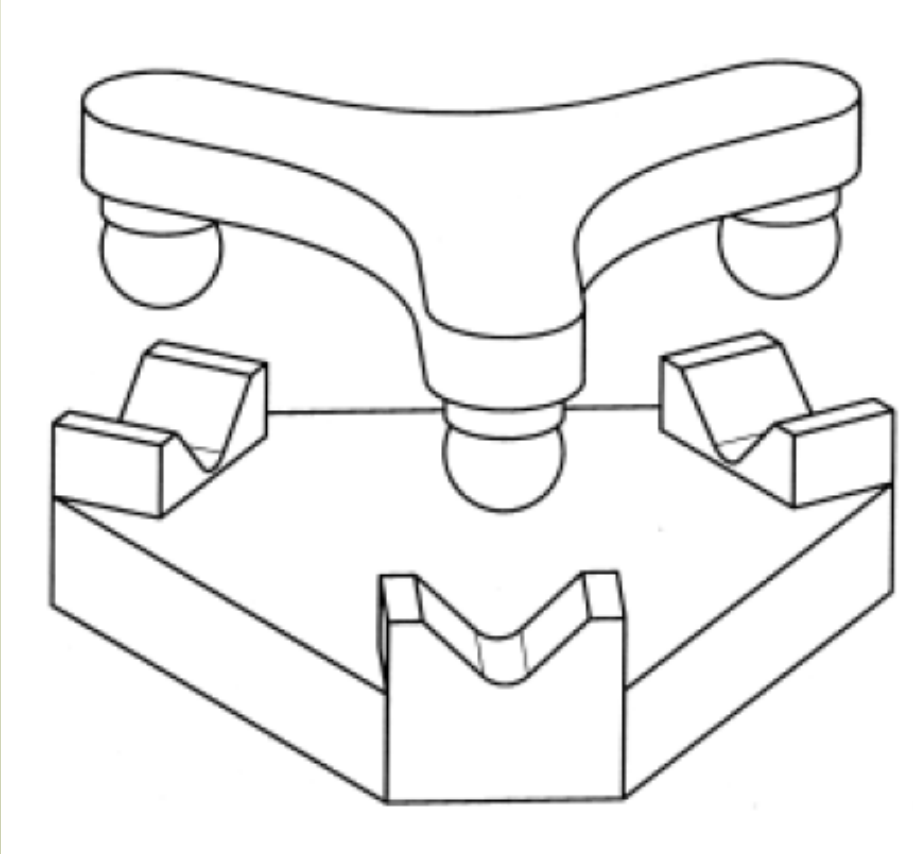

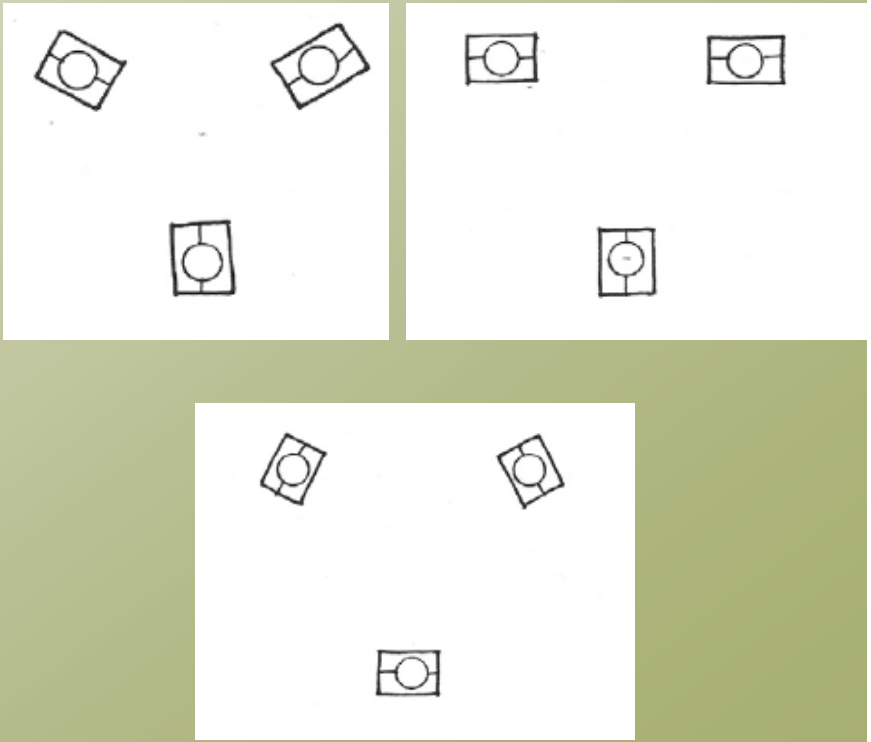

Stablity (or Lack Thereof) of 6 Point/3 Groove System with Different Configurations

Kinematic Constraints: Description

- 3 Fundamental Concerns
  - Friction
    - Sliding must be allowed
    - Coefficient of friction must be lower than tangent of angle
  - Contact Stresses
    - Reduce where possible
  - Stability
    - Achieved through geometry

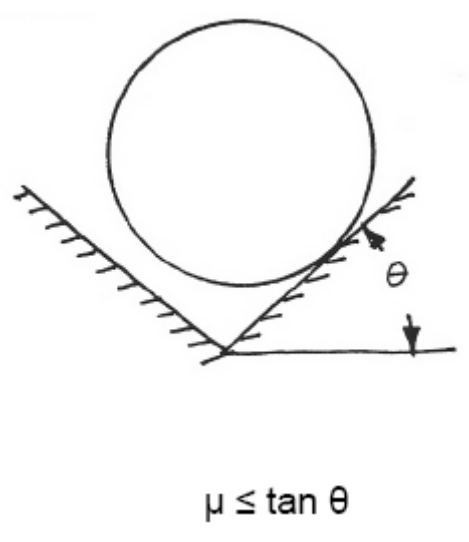

Kinematic Constraints: Advantages & Disadvantages

- Advantages:
  - Holding a Body with Highest Precision
  - Motion without Backlash
  - Repeatable to Sub-micron level
  - Can be Built without Precision Manufacturing Techniques
- Disadvantages:
  - Possibility of Overconstraint
  - Friction, Surface Finish, Loads
  - Impossibility of True Point Contacts
  - High Contact Stresses
  - Does not Achieve Low Cost Manufacturing Goals

Kinematic Constraints: An Example

- Newport Adjustable Kinematic Optic Mount
  - Flat/Groove/Cone
  - Actuators for Pitch & Yaw
  - Not Gimbaled – Some x & y Offset Results

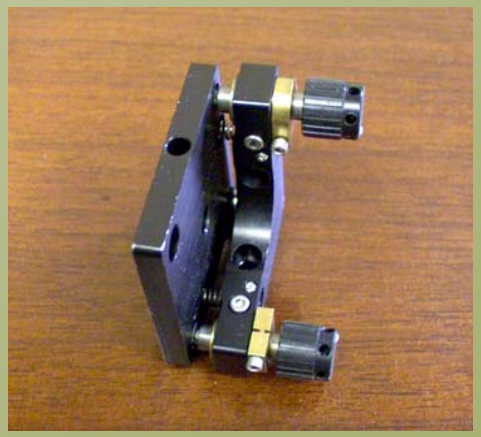

Quasi-Kinematic Constraints: Description

- Similar Concept to Kinematic Constraints
- Slight Overconstraints Allowed (Area Contacts)
- Each Contact Area Constrains one DOF

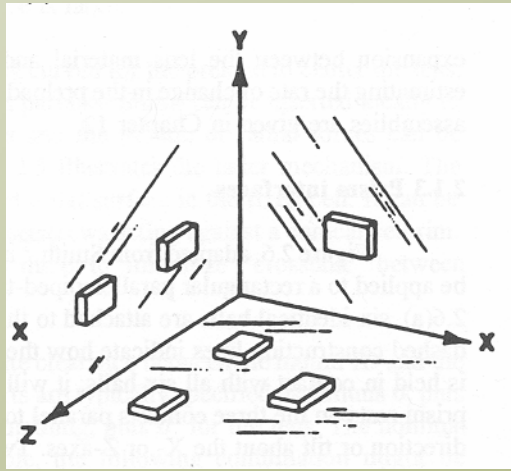

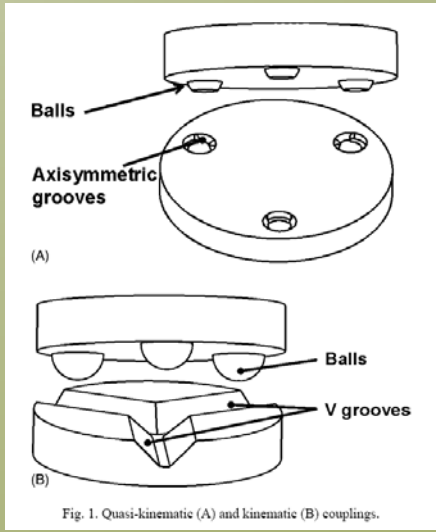

Fig. 1. Quasi-kinematic (A) and kinematic (B) couplings.

Quasi-Kinematic Constraints: Advantages & Disadvantages

- Advantages:
  - Good Repeatability (10’s of Microns)
  - Low Costs
  - Lower Stresses
  - Readily Machined (with CNC)
  - Achieves Low Cost Manufacturing Goals
- Disadvantages:
  - Not Quite as Good Performance

Kinematic Constraints: An Example

- CNC Machinable Filter Mount
  - 6 Area Contacts
  - 3 Spring Preloads
  - Filter Can Be Removed & Replaced

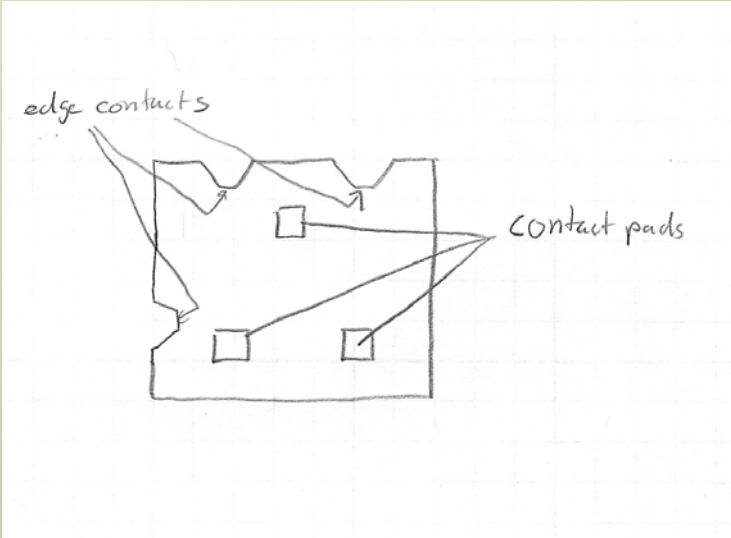

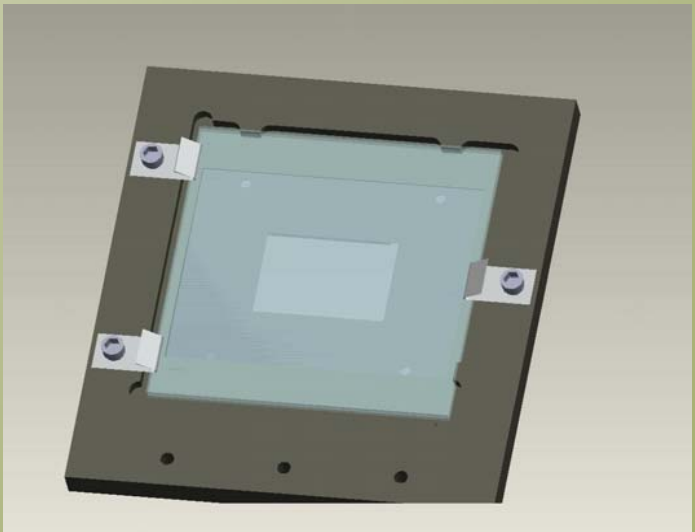

Conclusion

- Kinematic Coupling:
  - Precise Constrain of All 6 DOF's
- Quasi-Kinematic Coupling:
  - Less Expensive
  - Lower Performance
- Both Mounts Are Used Extensively in Optomechanical Systems
- Important Concepts to Know & Darn Useful!