OPTI 421/521 – Introductory Opto-Mechanical Engineering

Homework 8

Kinematics, Finite element modeling in Solid Works

2. Finite element modeling, meshing optimization

Model a cantilevered aluminum beam, 15 cm long, 2 cm x 1 cm cross section with appropriate boundary conditions. Make a cut that goes 15 mm through the beam (n=15 mm, r=1 mm). Refine the mesh of your model and determine stress and deflection for a 1 N load. Show that the mesh is adequate to provide 1% accuracy for the stress calculation. Repeat this with r = 0.01 mm. Explain the difference.

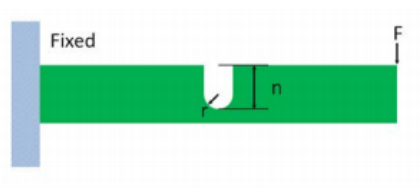

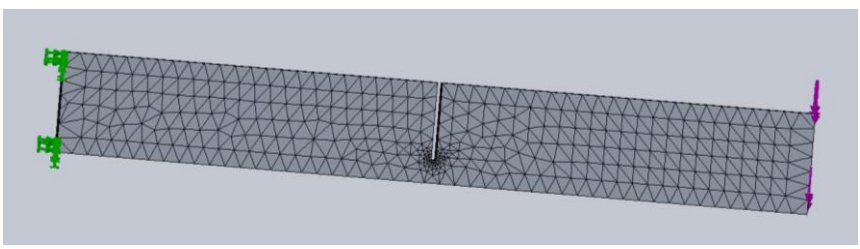

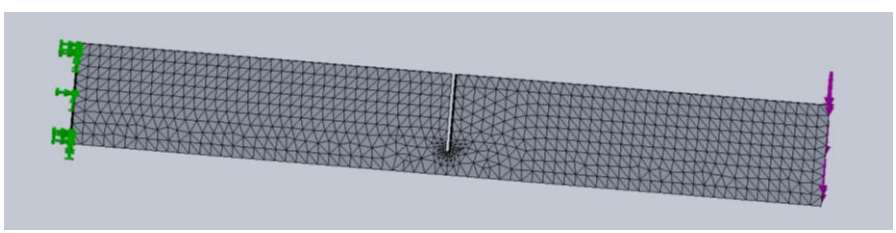

a) **R=1mm**

Mesh Size (cm)	Stress (MPa)	Displacement (mm)
0.3	4.46	0.008548
0.25	4.56	0.008564
0.2	4.52	0.008566
0.15	4.546	0.008579
0.14	4.412	0.008584
0.13	4.448	0.008581
0.12	4.383	0.008587
0.11	4.834	0.008589
0.1	4.871	0.008584
0.09	4.802	0.008591
0.08	4.856	0.008597
0.07	5.066	0.008624
0.06	5.089	0.008625
0.05	5.028	0.008623

3. Finite element modeling: Thermal expansions and stresses

Use Solid Works Simulation to calculate thermal expansions and stresses for a 15 cm long, 2 cm x 1 cm aluminum bar. For the two cases below, apply the effect of a 1° C ambient temperature change to your models. Show the maximum deflection and maximum stress. Compare with a hand calculation

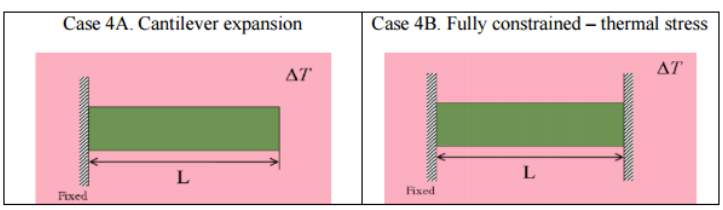

3A. Cantilever expansion

$$T_1 = 20°\text{C}$$

$$T_2 = 21°\text{C}$$

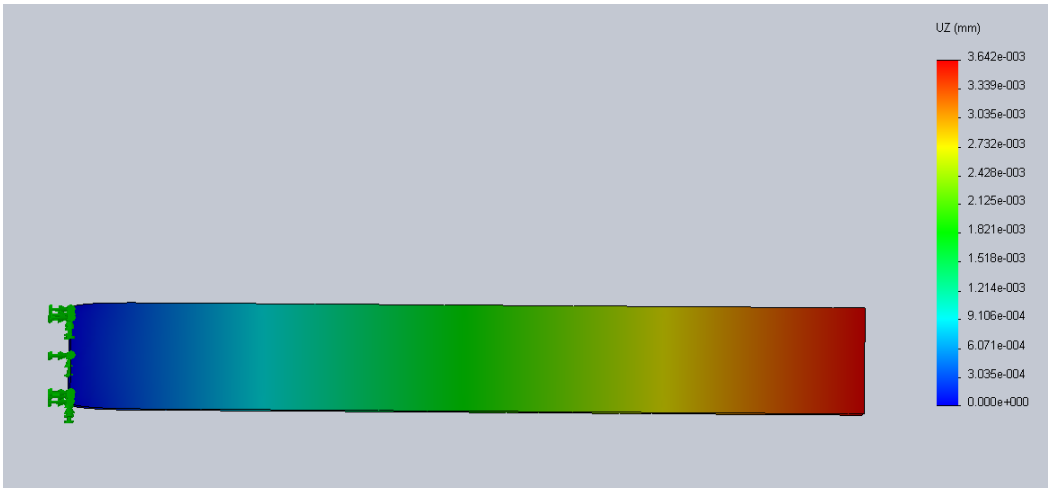

From simulation

$$\Delta L = 3.642 \times 10^{-3} mm = 3.642 \ \mu m$$

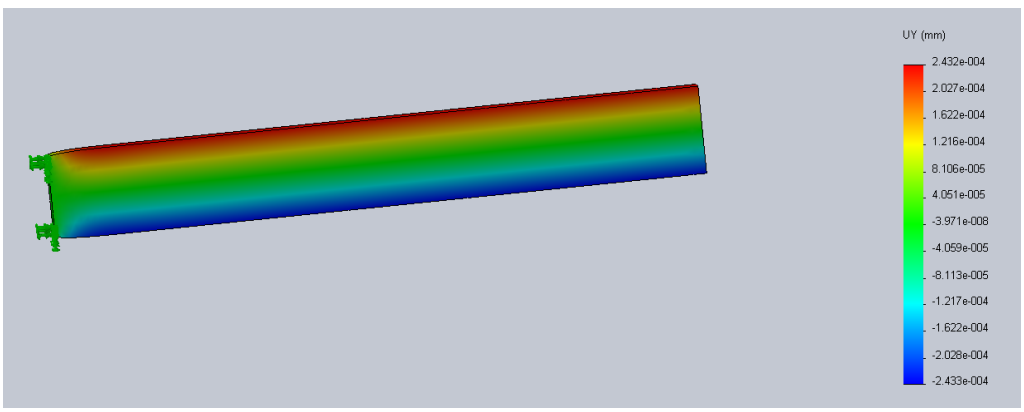

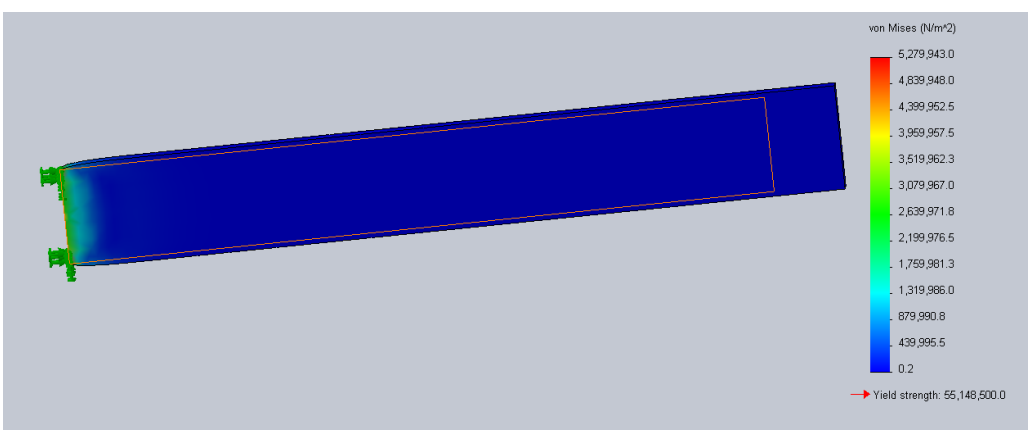

Hand Calculation

$$\alpha = 24 \times 10^{-6} \ /°\mathrm{C}$$

$$\Delta T = 1°\mathrm{C}$$

$$L = 0.15\ m$$

$$\Delta L_z = \alpha \Delta T L_z = (24 \times 10^{-6})(1)(0.15) = 3.6 \times 10^{-6} m$$

$$\Delta L_z = 3.6\ \mu m$$

$$\Delta L_y = \alpha \Delta T L_y = (24 \times 10^{-6})(1)(0.02) = 4.8 \times 10^{-7} m$$

$$Resultant\ Displacement = \sqrt{\Delta L_z^2 + \Delta L_y^2} = 3.63 \times 10^{-6} m$$

Stress should be zero, any stress is a residual from the boundary conditions.

3B. Fully Constrained

Stress

Simulation shows uniform stress distribution.

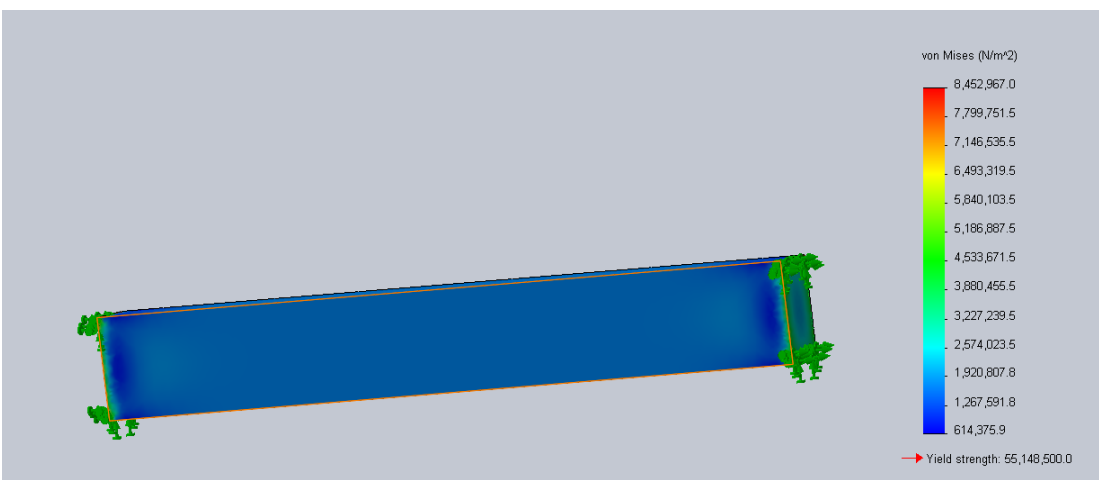

Hand Calculation

$$\Delta L = \alpha \Delta T L = (24 \times 10^{-6})(1)(0.15) = 3.6 \times 10^{-6} m$$

In this case the constraint imposed a stress deflecting the beam by ΔL.

$$\sigma = \varepsilon E = \frac{\Delta L}{L} E = \frac{3.6 \times 10^{-6} m}{0.15\ m}(6.9 \times 10^{10} N/m^2)$$

$$\sigma = 1.656\ MPa$$

Let's look at the deflection in y and x direction. Now the results in a hand calculation for thermal deflections won't be the same because of the effects of the Poisson's ratio. Where the stress will cause the cross sectional dimensions to bulge out. We can calculate the bulge caused by the Poisson Ratio with the equation:

$$\Delta t_{poisson} = t\upsilon \frac{\Delta L}{L} = 2 \times 10^{-2} m \times (0.33) \times \frac{3.6 \times 10^{-6} m}{0.15 m} = 1.584 \times 10^{-7} m$$

$$\Delta t_{poisson\ y} = 0.1584 \mu m$$

$$\Delta t_{poisson\ x} = 0.0792\ \mu m$$

$\Delta t_{poisson}$ corresponds to change in thickness of the beam due to the Poisson ratio. We can now do thermal calculation with the new thickness of the beam resulting from the induced stress. The new thickness of the beam is the following:

$$t_y{}' = t_y + \Delta t_{poisson\ y} = 2cm + 1.584 \times 10^{-5} cm = 2.00001584\ cm$$

$$t_x{}' = t_x + \Delta t_{poisson\ x} = 1cm + 0.792 \times 10^{-5} cm = 1.00000792\ cm$$

Now we take the effect of the thermal change in the beam thickness

$$\Delta t_{thermal\ y} = \alpha t' \Delta T = (24 \times 10^{-6})(1)(2.00001584\ \times 10^{-2}) = 4.8 \times 10^{-7} m$$

$$\Delta t_{thermal\ x} = \alpha t' \Delta T = (24 \times 10^{-6})(1)(1.00000792\ \times 10^{-2}) = 2.4 \times 10^{-7} m$$

The effects from the Poisson ratio and the thermal expansion are now added to find the net result .

$$\Delta t_y = \Delta t_{thermal\ y} + \Delta t_{poisson\ y} = 1.584 \times 10^{-7} m + 4.8 \times 10^{-7} m = 6.38 \times 10^{-7} m$$

$$\Delta t_x = \Delta t_{thermal\ x} + \Delta t_{poisson\ x} = 0.0792 \times 10^{-7} m + 2.4 \times 10^{-7} m = 2.48 \times 10^{-7} m$$

$$Resultant\ Displacement = \sqrt{\Delta t_x^2 + \Delta t_y^2} = 7.987 \times 10^{-4} m$$

Y-Displacement

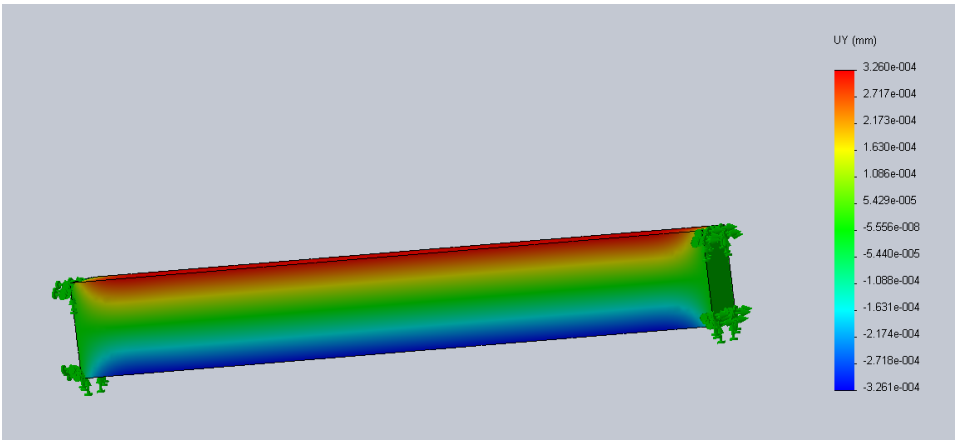

X-Displacement

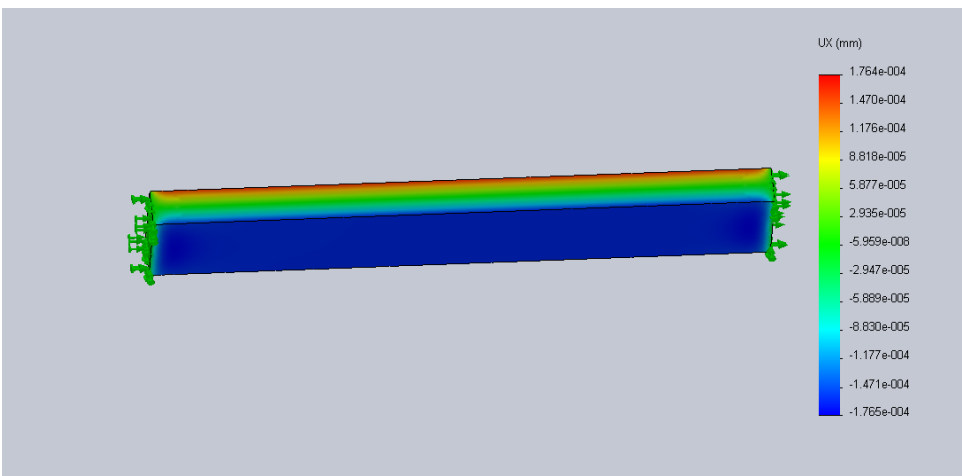

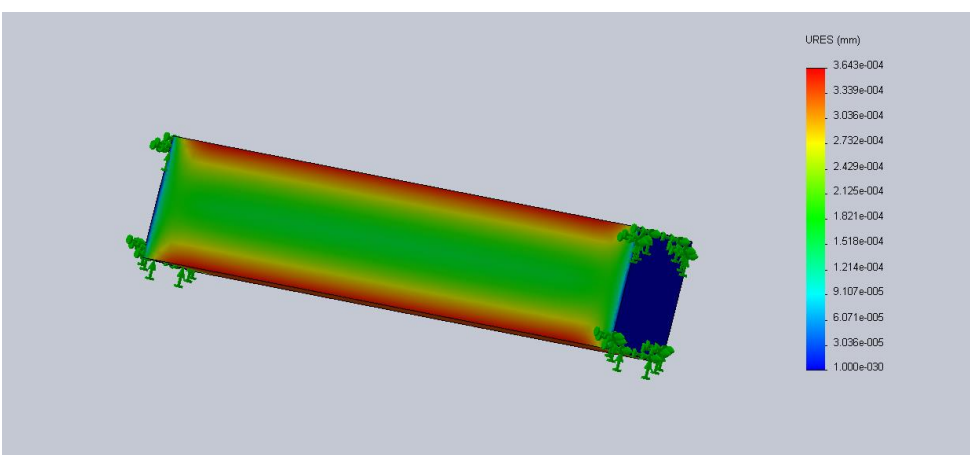

4. Finite element modeling: Thermal gradient

Use Solid Works simulation to model a thermal gradient and thermal distortion induced in a 15 cm long, 2 cm x 1 cm aluminum bar. For the two cases below, model the effect of a 0.1° C/cm thermal gradient. Show the maximum deflection and maximum stress. Compare each case with a hand calculation.

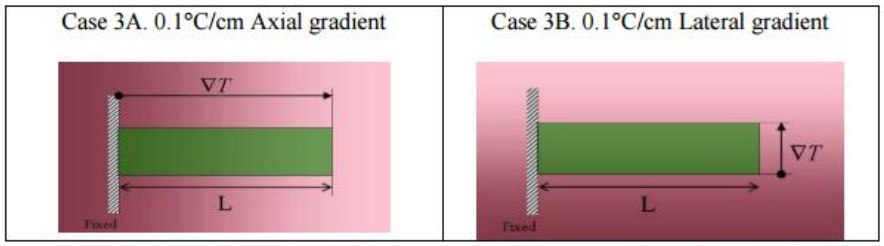

4A. Axial Gradient

Gradient

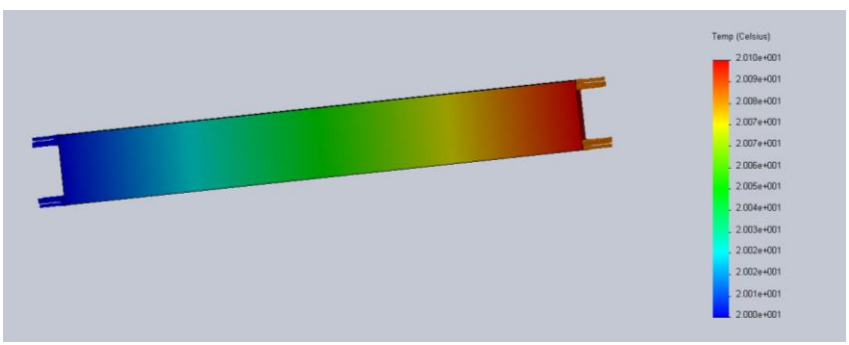

Displacement Z

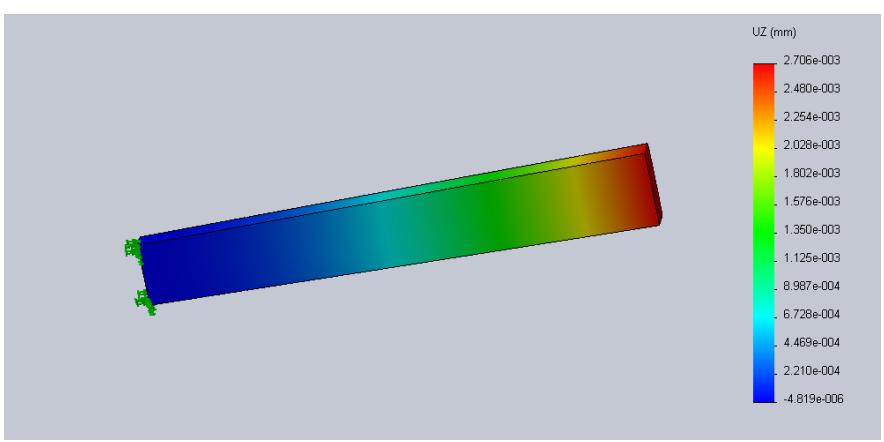

Stress

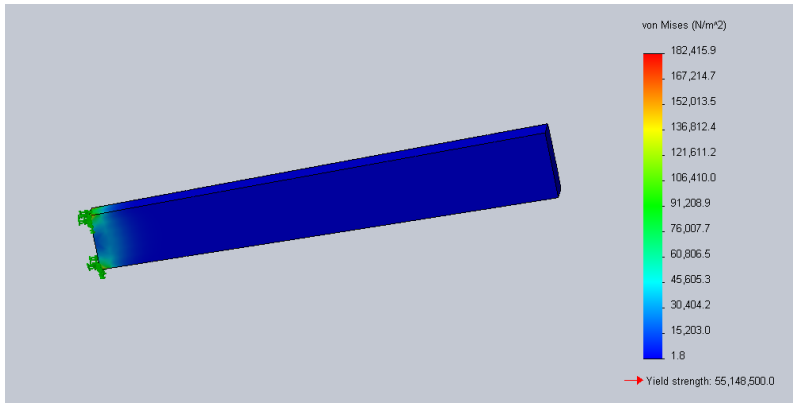

Hand calculations

$$\alpha = 24 \times 10^{-6}$$

$$Gradient = 0.1° \, C/cm \, , \;\; Total \; Gradient = \; 1.5°C$$

$$\Delta T = 1.5 \; °\mathrm{C}$$

$$T_1 = 20°\mathrm{C}$$

$$T_2 = 21.5°\mathrm{C}$$

$$L = 0.15 \; m$$

$$\delta_z(z) = \int_0^L \frac{\alpha \Delta T}{\Delta z} z dz = \frac{\alpha \Delta T}{\Delta z} \frac{L^2}{2}$$

$$\delta_z = \frac{24 \times 10^{-6}(1.5)(0.15m)^2}{2\,(0.15m)} = \frac{24 \times 10^{-6}(1.5)(0.15m)}{2}$$

$$\delta_z = 2.7 \times 10^{-6} m$$

$$\delta_z = 0.0027 \; mm$$

$$stress = \sigma \approx 0$$

The results match well.

4B. Lateral Gradient

Temperature gradient

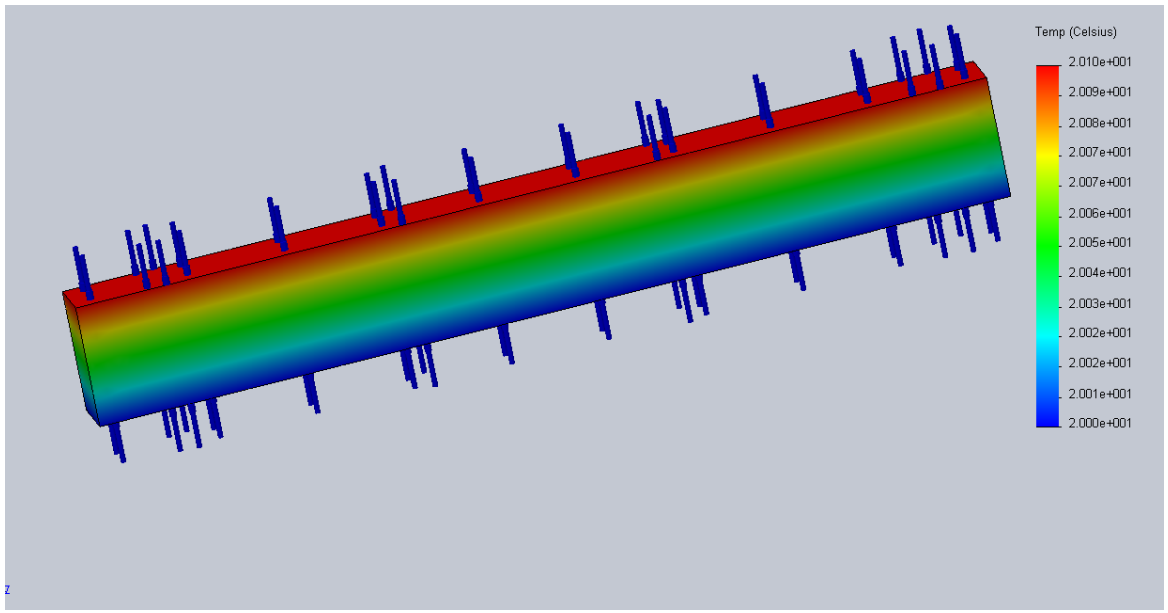

Displacement

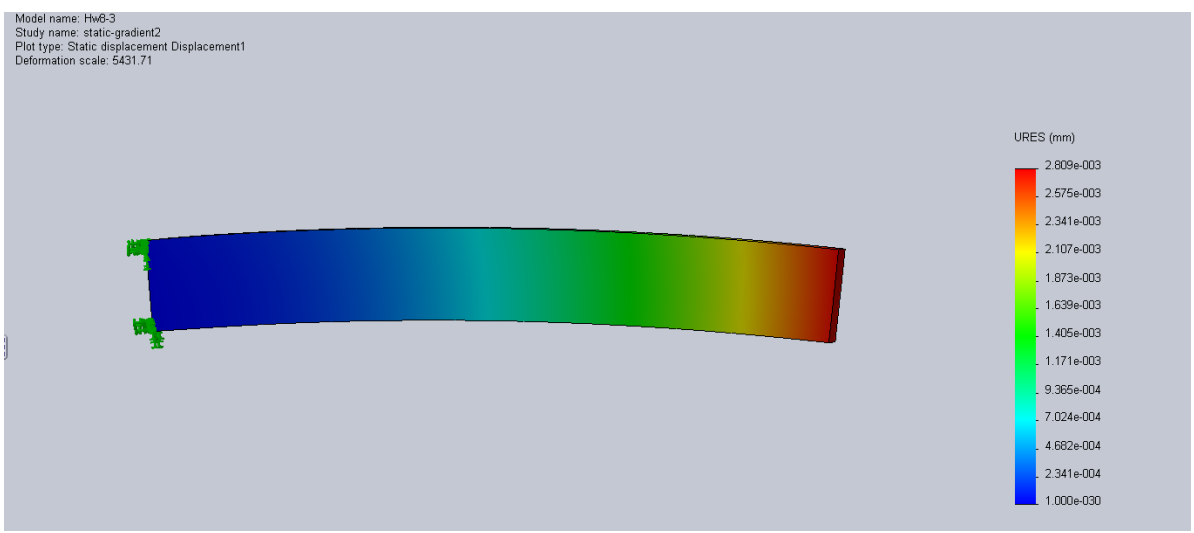

Stress

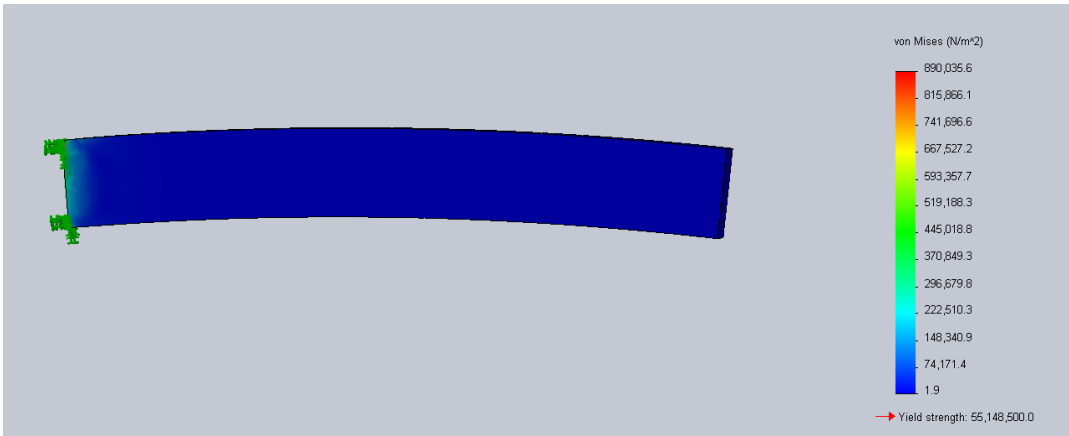

Hand Calculations

$$\alpha = 24 \times 10^{-6}$$

$$Gradient = 0.1° \, C/cm \, , \;\; Total\ Gradient = \; 0.2°C$$

$$\Delta T = 0.2 \text{ °C}$$

$$T_1 = 20°\text{C}$$

$$T_2 = 21.5°\text{C}$$

$$L = 0.15\, m$$

$$L_y = 0.02\, m$$

$$\delta_y(z) = \frac{\alpha \Delta T L^2}{2L_y}$$

$$\delta_y(z) = \frac{24 \times 10^{-6}(0.2)(0.15)^2}{2(0.02)}$$

$$\delta_y = 2.7 \times 10^{-6} m$$

$$\delta_y = 0.0027\, mm$$

$$stress = \sigma \approx 0$$