Critical Mounting of Lenses (from Hopkins)

Critical Mounting Required for:

- Fast systems with wide FOV's
- Many Elements
- Tight error budget (e.g. $\lambda/10$) yielding tolerances of a few microns

Basic Approach

- Use of optical surfaces, not mechanical surfaces of lens for alignment and mounting
- Allow adjustment to "remove" lens wedge
- Minimize critically machined surfaces and hence, tolerance build-up
- Align interferometrically
- Bond in place while monitoring (interferometer)
- Use thermally compensating materials

A Perfectly Centered Lens Mounted in a Cell

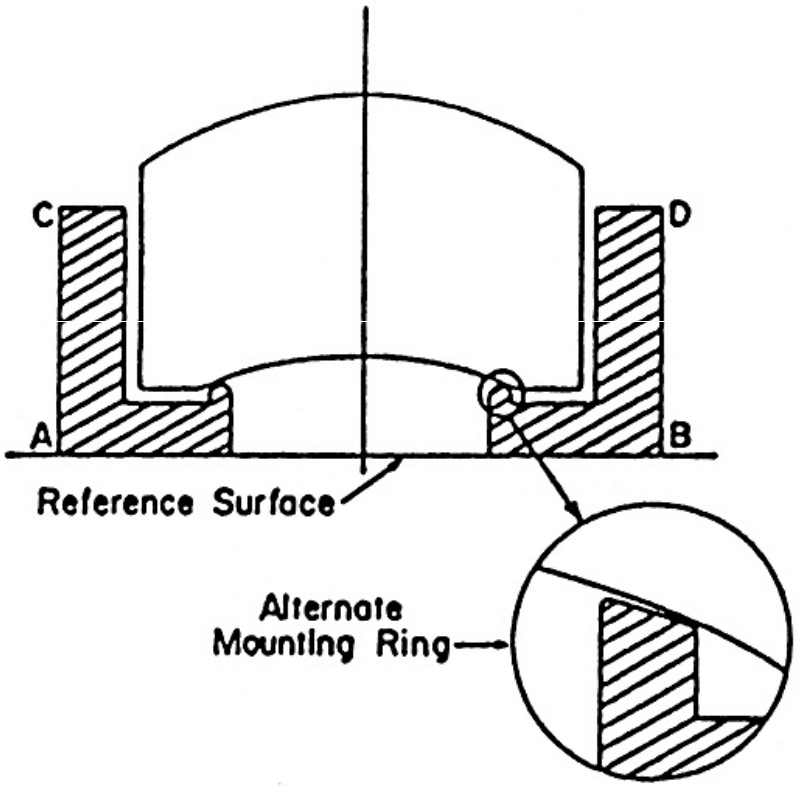

Centering Procedure

- The alignment procedure consists of iterating the following two steps:
  1. Rock the lens on the lens cell unit until the two reflected images are evenly spread on the two sides of the reference optical axis as seen in the crosshair
  2. Translate the lens and cell unit until the two reflected images come together. Iterate steps 1 & 2 as necessary.

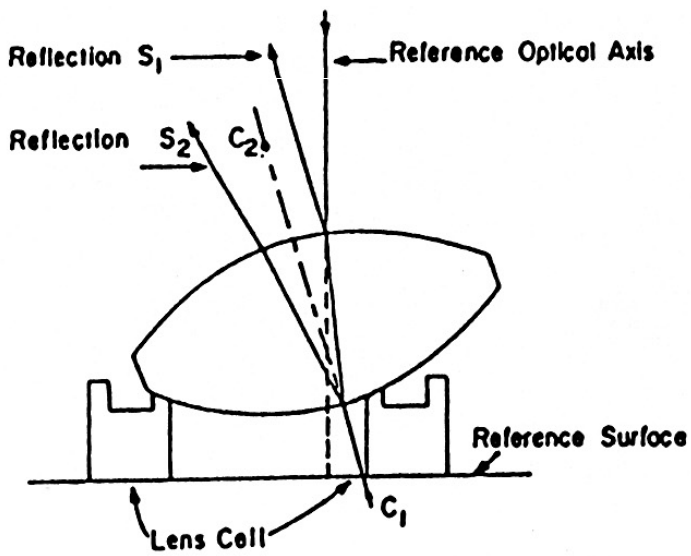

Improperly centered: Its optical axis is not perpendicular to the reference surface

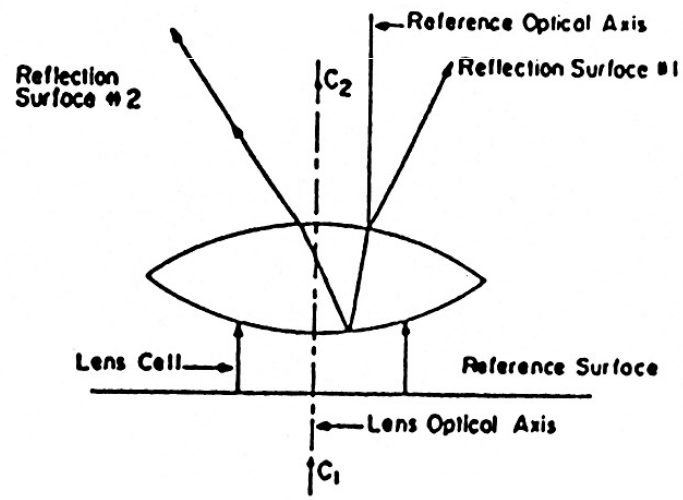

A centered lens: Its optical axis is perpendicular to the reference surface

A Lithography Lens Using This Method

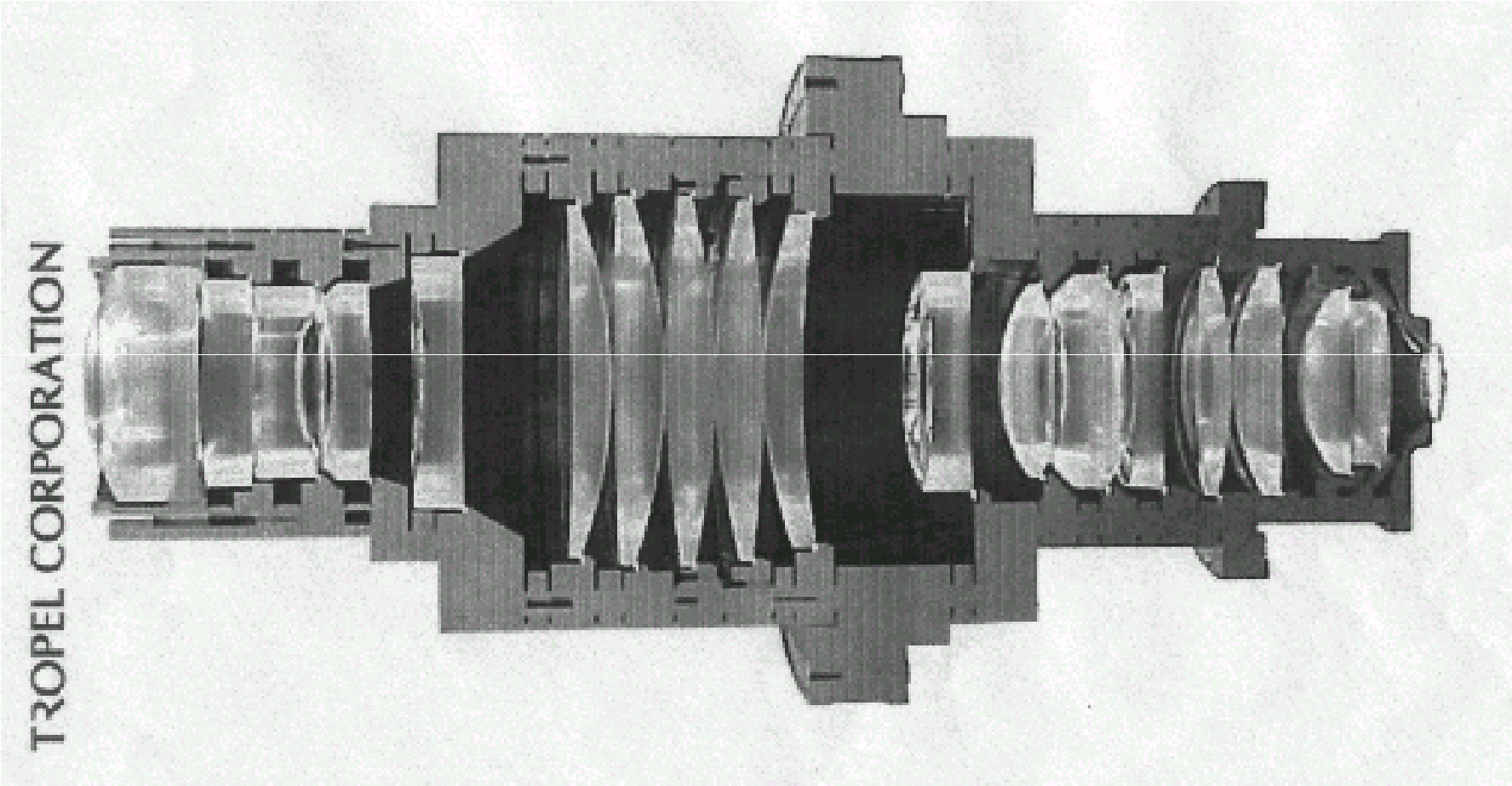

A real lithography lens, sliced in half by water jet!

Close-up of the Tropel Lens Cells

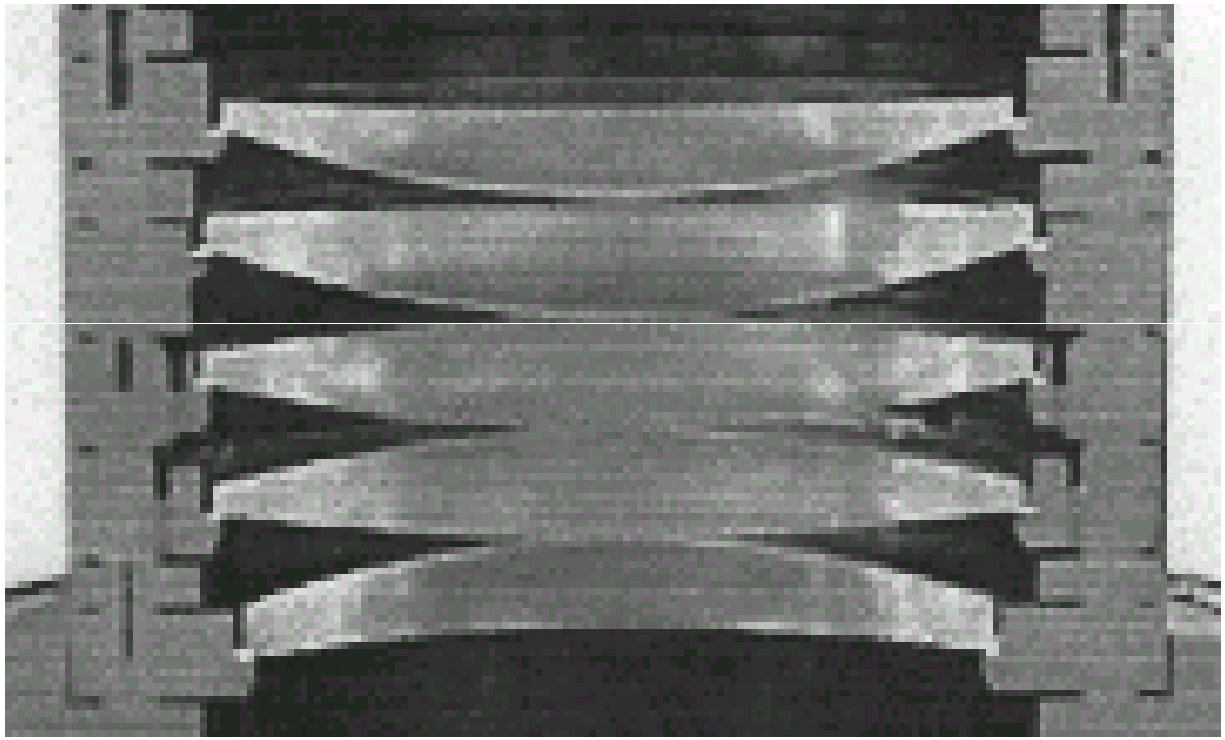

Precision lens centering using an air bearing, gauges and laser

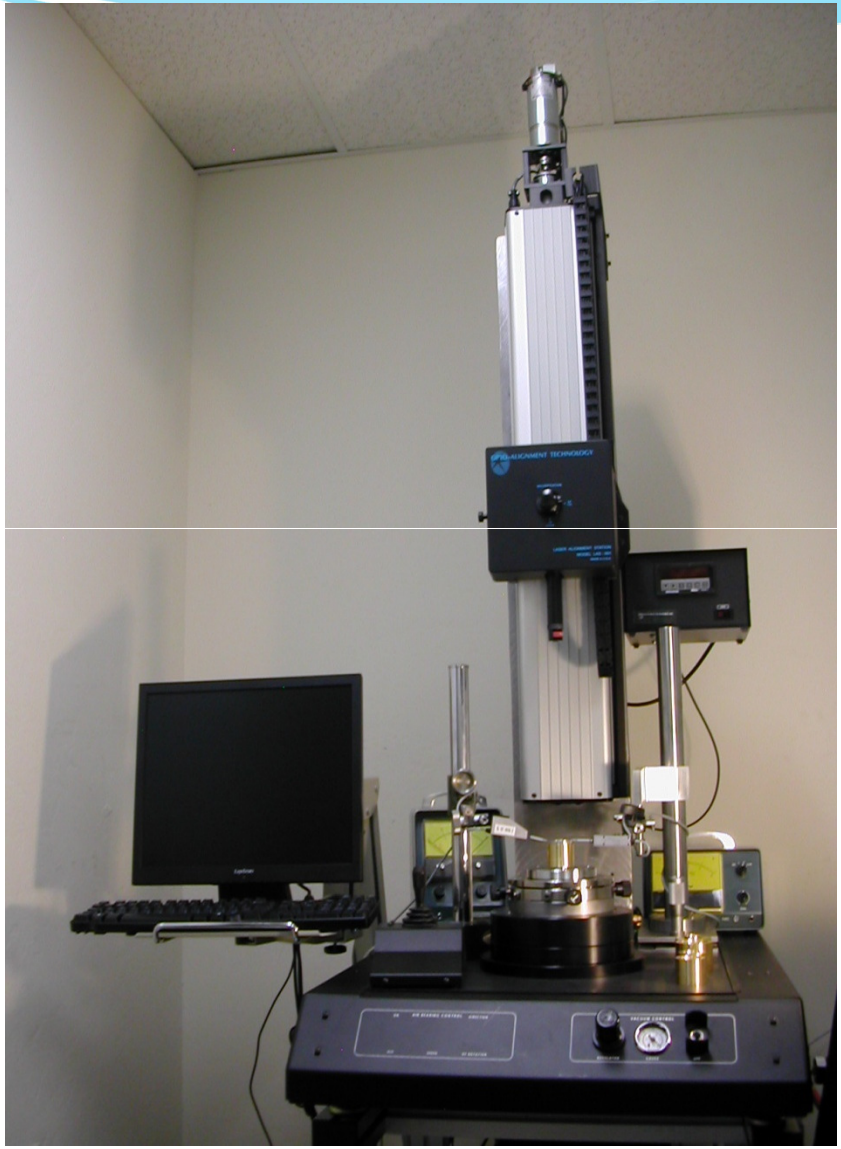

Lens Centering Station

Precision lens centering

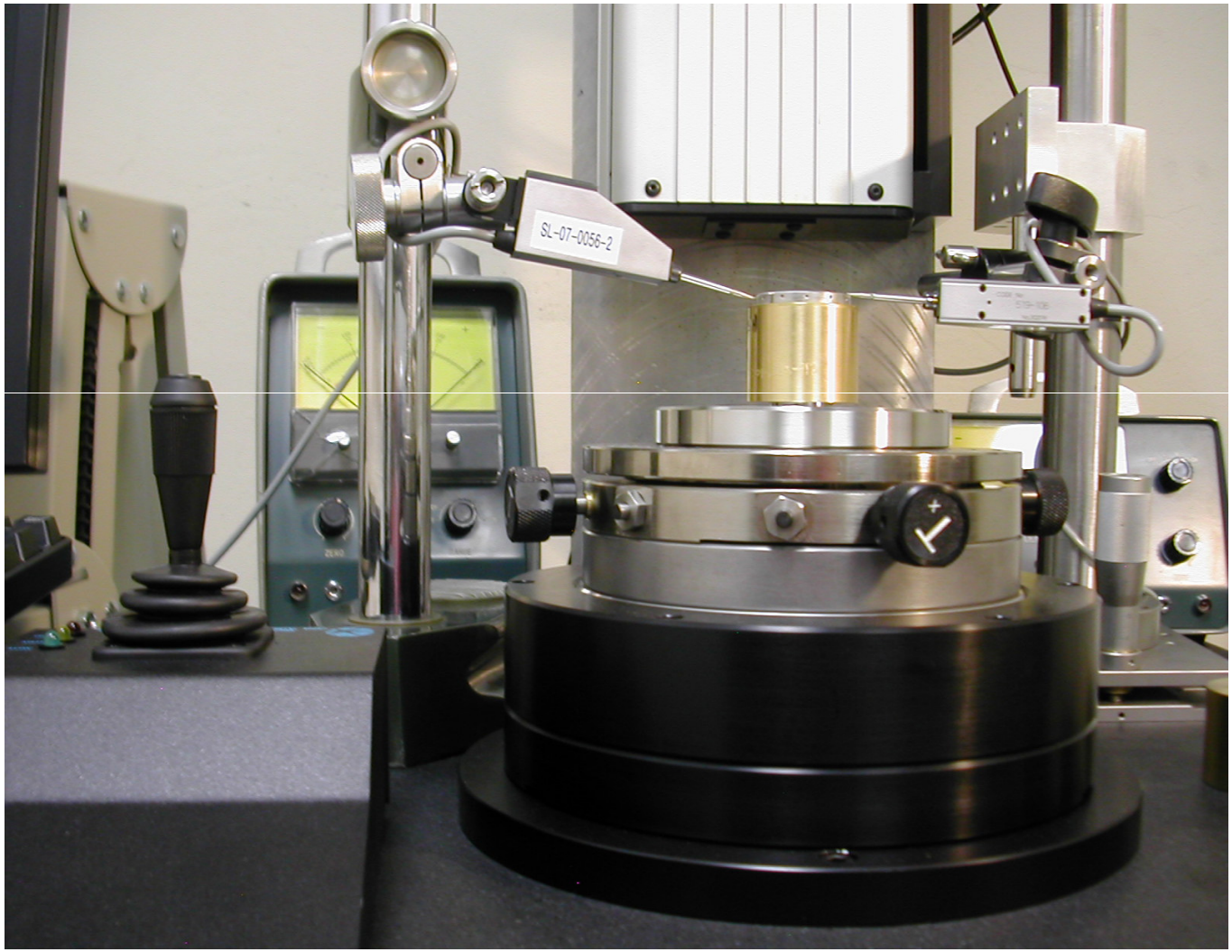

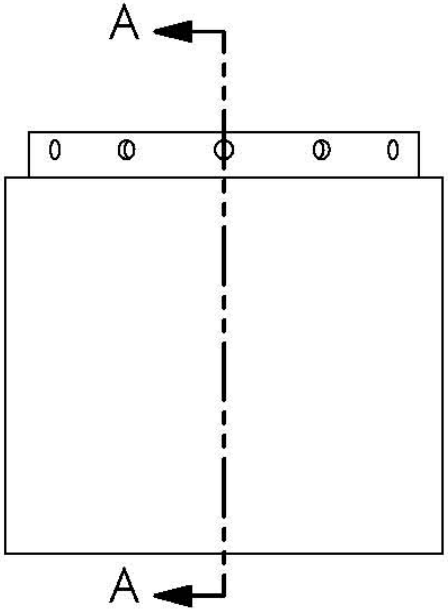

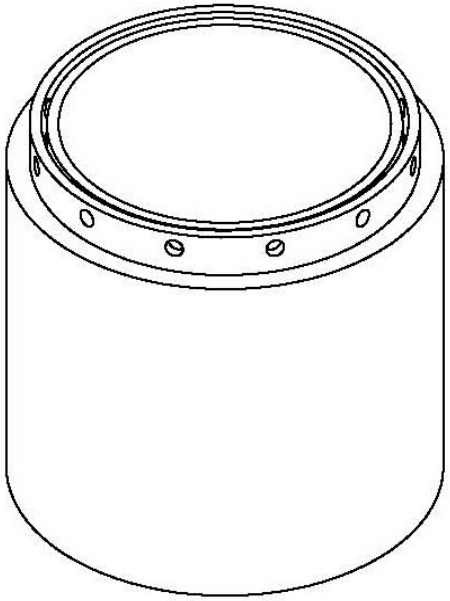

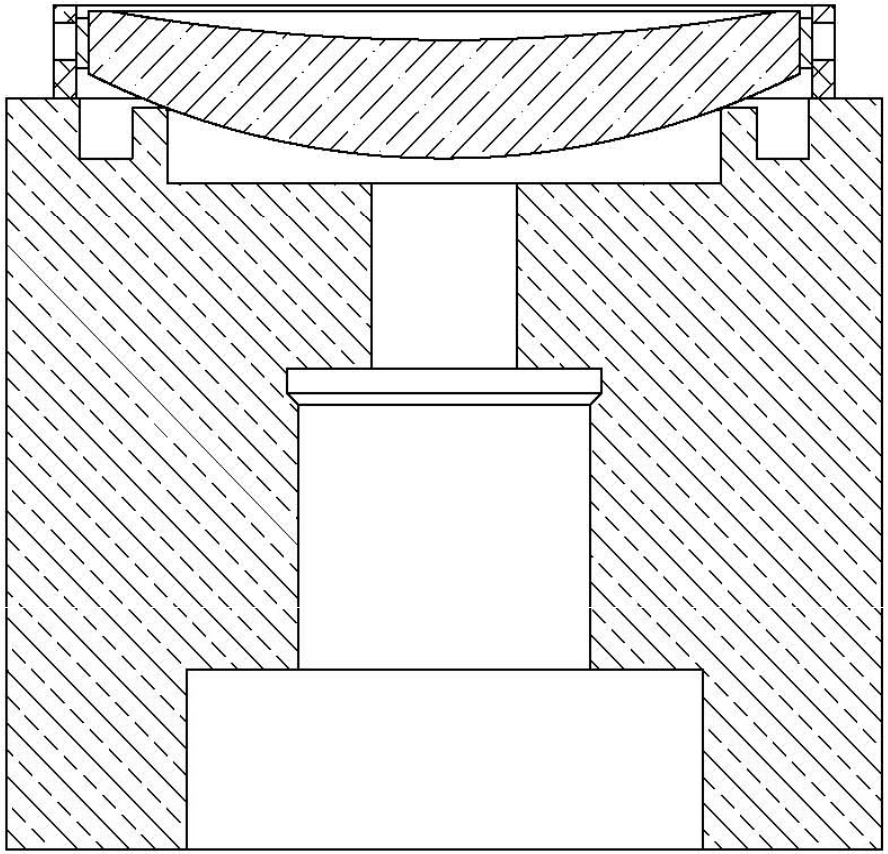

SECTION A-A

THIRD ANGLE PROJECTION

PROPRIETARY AND CONFIDENTIAL

THE INFORMATION CONTAINED IN THIS DRAWING IS THE SOLE PROPERTY OF CARDINAL OPTICS, INC. ANY REPRODUCTION IN PART OR AS A WHOLE WITHOUT THE WRITTEN PERMISSION OF

NEXT ASSY | USED ON

UNLESS OTHERWISE SPECIFIED:
DIMENSIONS ARE IN INCHES
TOLERANCES:
ANGULAR: MACH ±30'
BEND ±30'
ONE PLACE DECIMAL ±.05
TWO PLACE DECIMAL ±.01
THREE PLACE DECIMAL ±.005
FOUR PLACE DECIMAL ±.0010
INTERPRETATION TOLERANCING PER:
ASME Y14.5M-1994
MATERIAL
SEE NOTES
FINISH
SEE NOTES

APPROVED	DATE
DRAWN	
CHECKED	
ENG APPR.	
MFG APPR.	
Q.A.	

COMMENTS:

TITL

SIZE
B

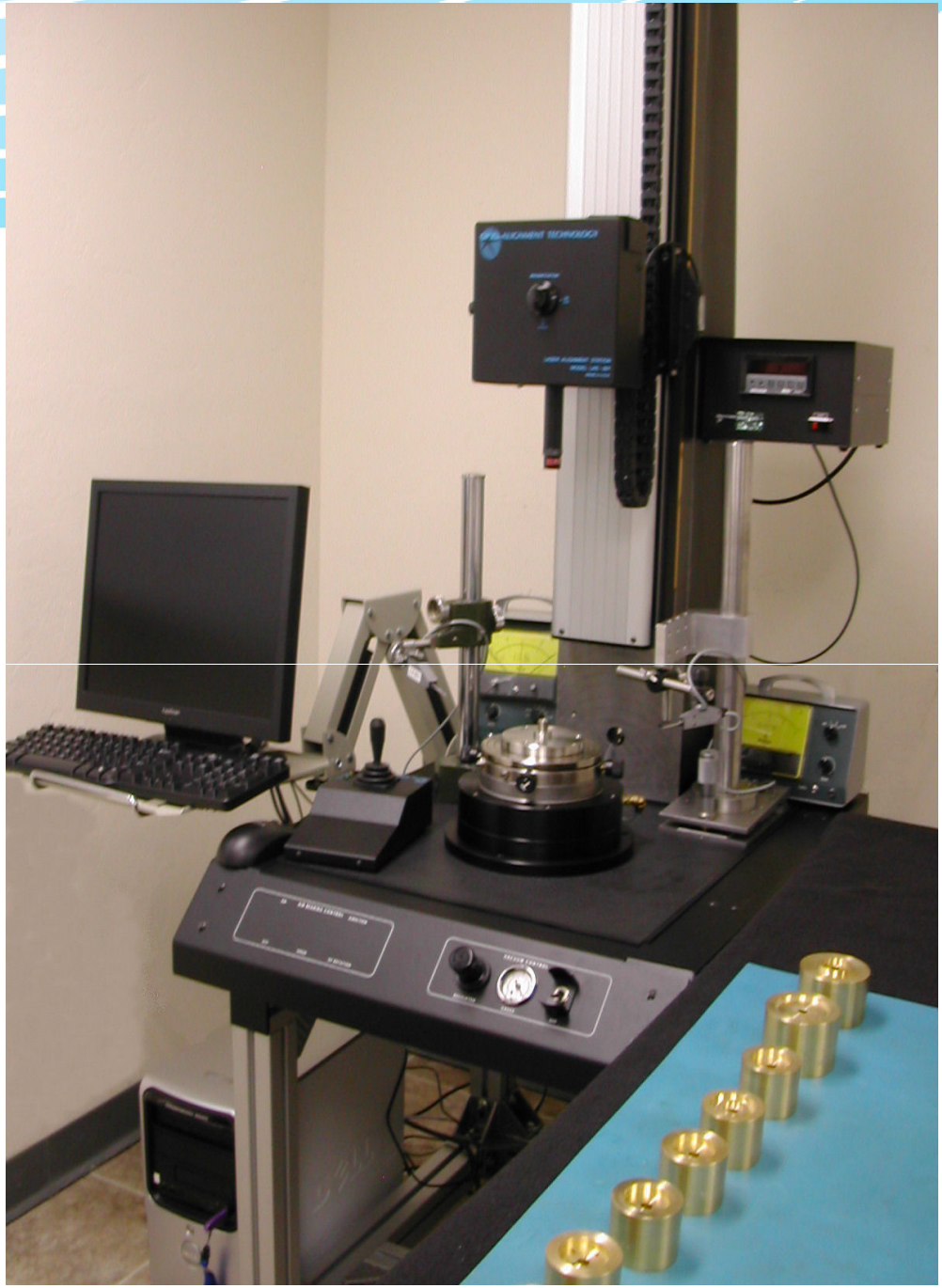

Alignment of a Cassegrain Telescope

We study this example for several reasons:

- Simple - 2 surfaces; one positive, one negative
- Identical to a telephoto lens
- Reflecting surfaces give great insight into visually understanding pupil motions, virtual images, etc.
- Alignment problems and effects of misalignment are nearly identical to those found in refracting systems

3 techniques are used:

- Visual - employs almost no equipment--quick, simple and often accurate enough
- Component by component alignment--more accurate
- Component by component including a final system alignment--most accurate

Image Positions of Cassegrain Telescope Components

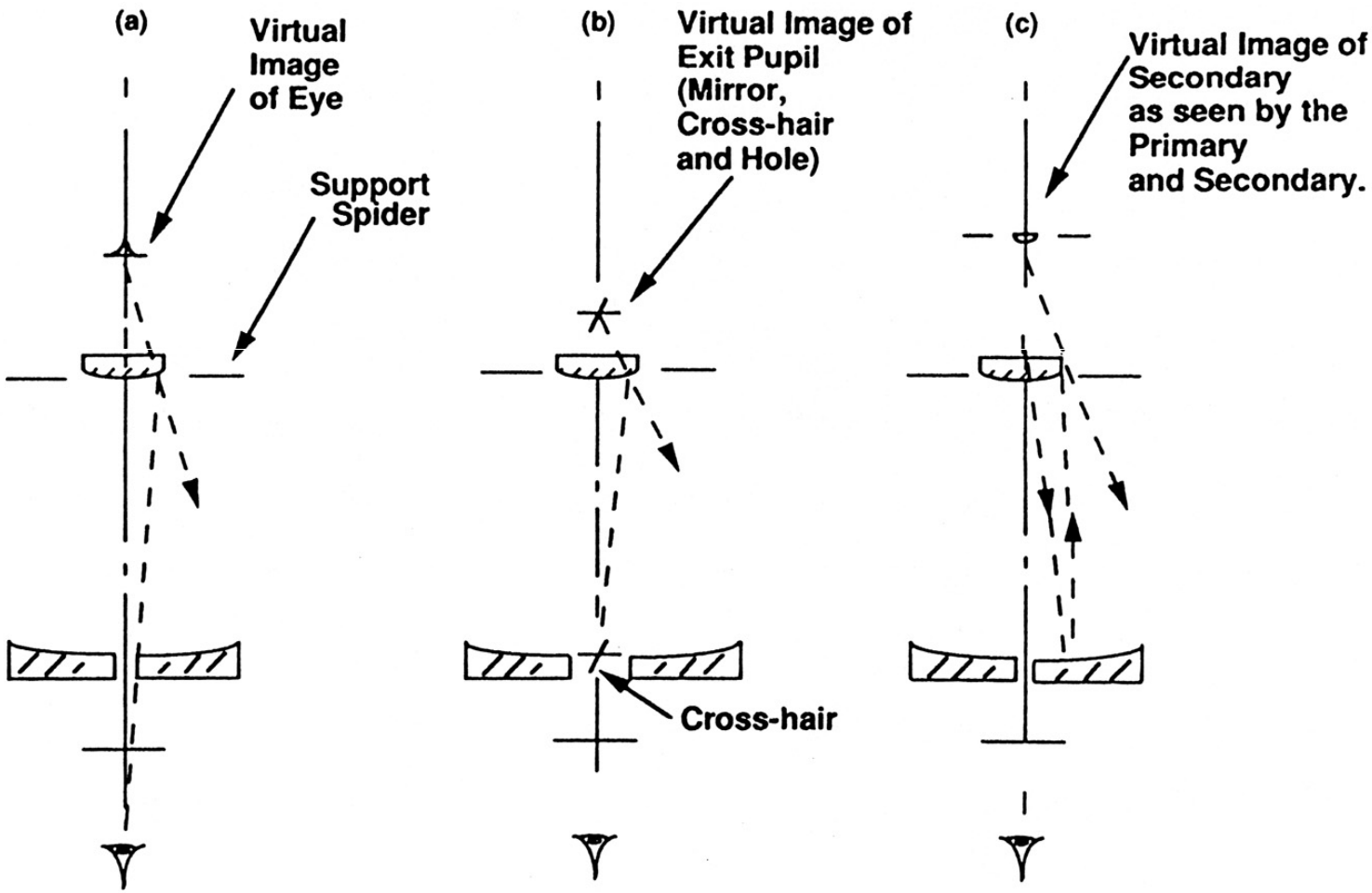

Observer's View of a Well Aligned Cassegrain Telescope

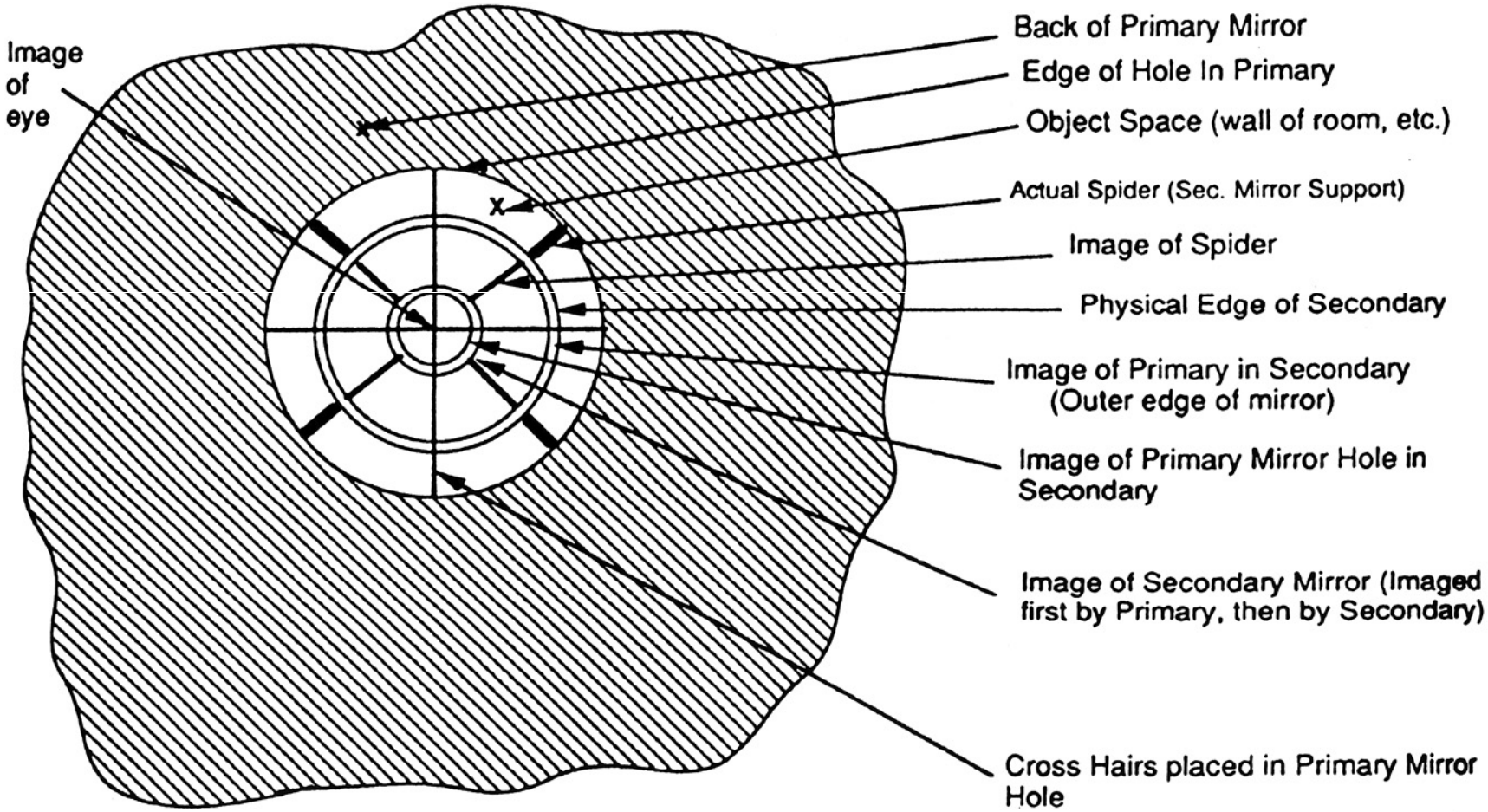

Observer's View of a Misaligned Cassegrain Telescope

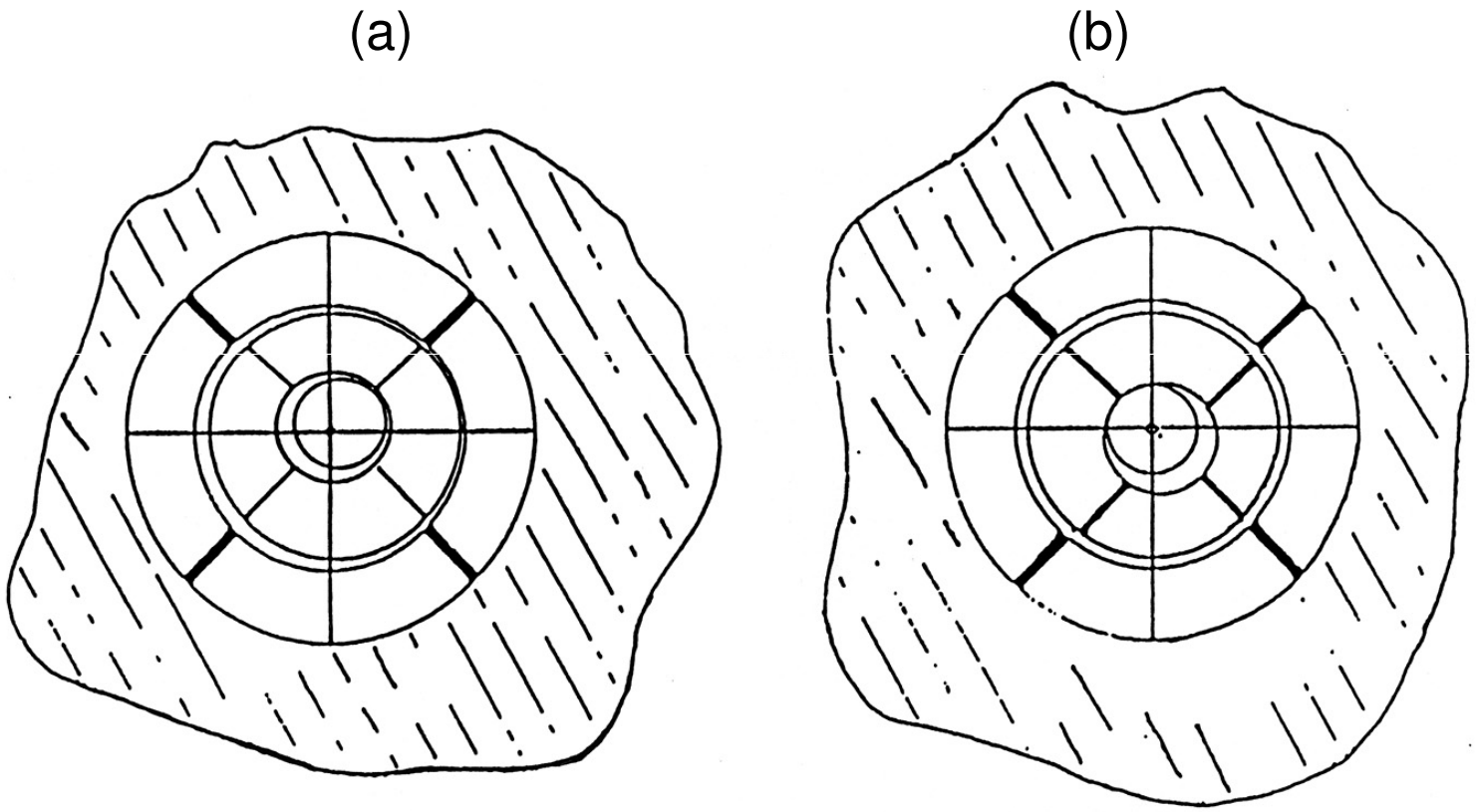

Secondary Mirror Misaligned

Primary Mirror Misaligned

Observer's View of a Misaligned Cassegrain Telescope

- Figures (a) and (b) depict two abnormal cases, namely with the secondary tilted (a) and the primary tilted (b)
- The alignment procedure would be as follows:
  1. Center the eye so that the crosshair, its image, and the image of the eye are aligned
  2. Tilt the secondary until the image of the primary is centered on the real secondary
  3. Tilt the primary until the image of the secondary is centered on the image of the primary. Use the image of the primary mirror's hole for this, if possible
  4. Use pin to locate the focal plane and adjust separation between primary and secondary until the focal plane position is correct
  5. Iterate steps 1-4 until a satisfactory visual alignment is achieved

Alignment of a Cassegrain Using Alignment Telescope and Point Source (LACI cube)

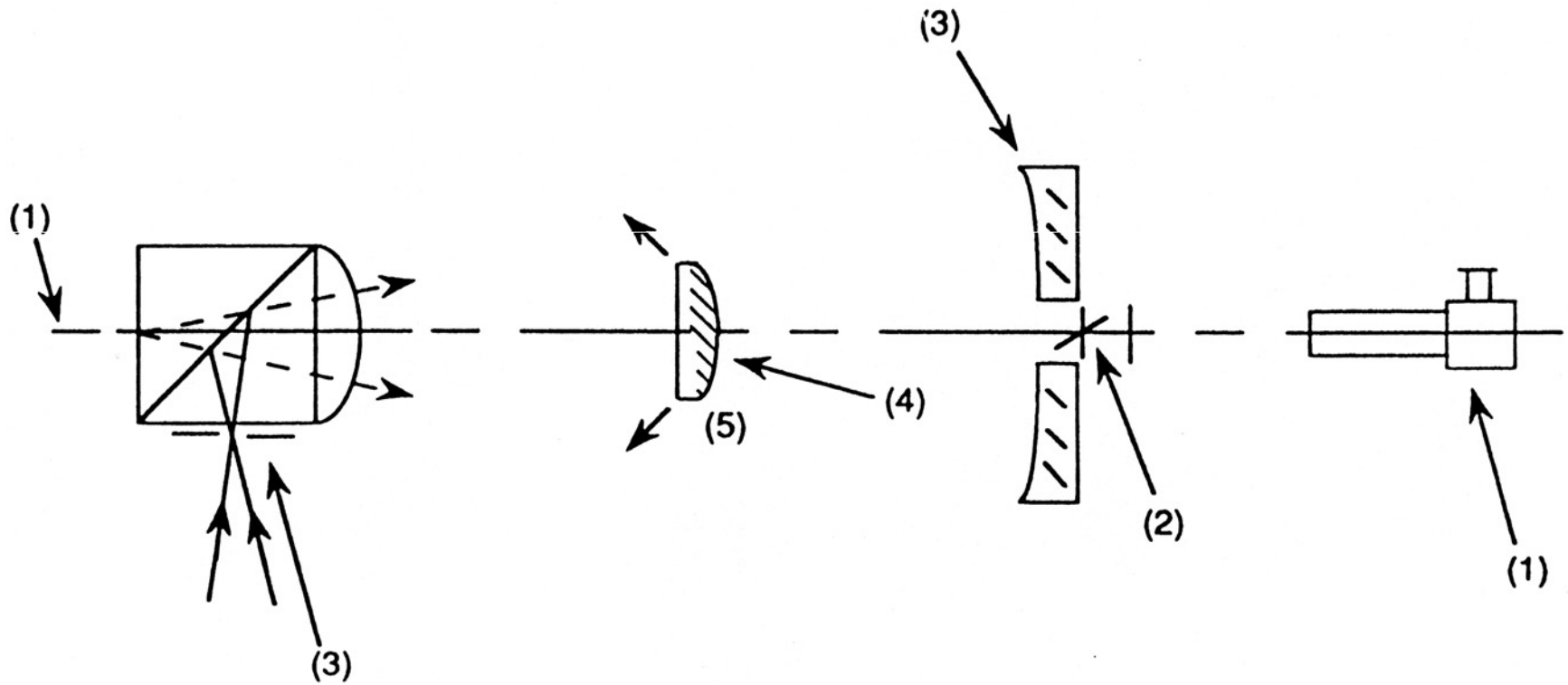

Alignment of a Cassegrain Using Alignment Telescope and Point Source (LACI cube)

1. Establish optical axis
2. Move mechanical center of primary onto optical axis
3. Place LACI (Shack cube) on axis of AT near the center of curvature of the primary. Tilt the parabola until the return is superimposed on the source. The parabola is now aligned with the optical axis.
4. Insert the secondary until centered on axis.
5. Use the autoreflection technique to remove secondary tilt as viewed through the AT

Cassegrain Alignment
Using Spot Size or Wavefront in Autocollimation

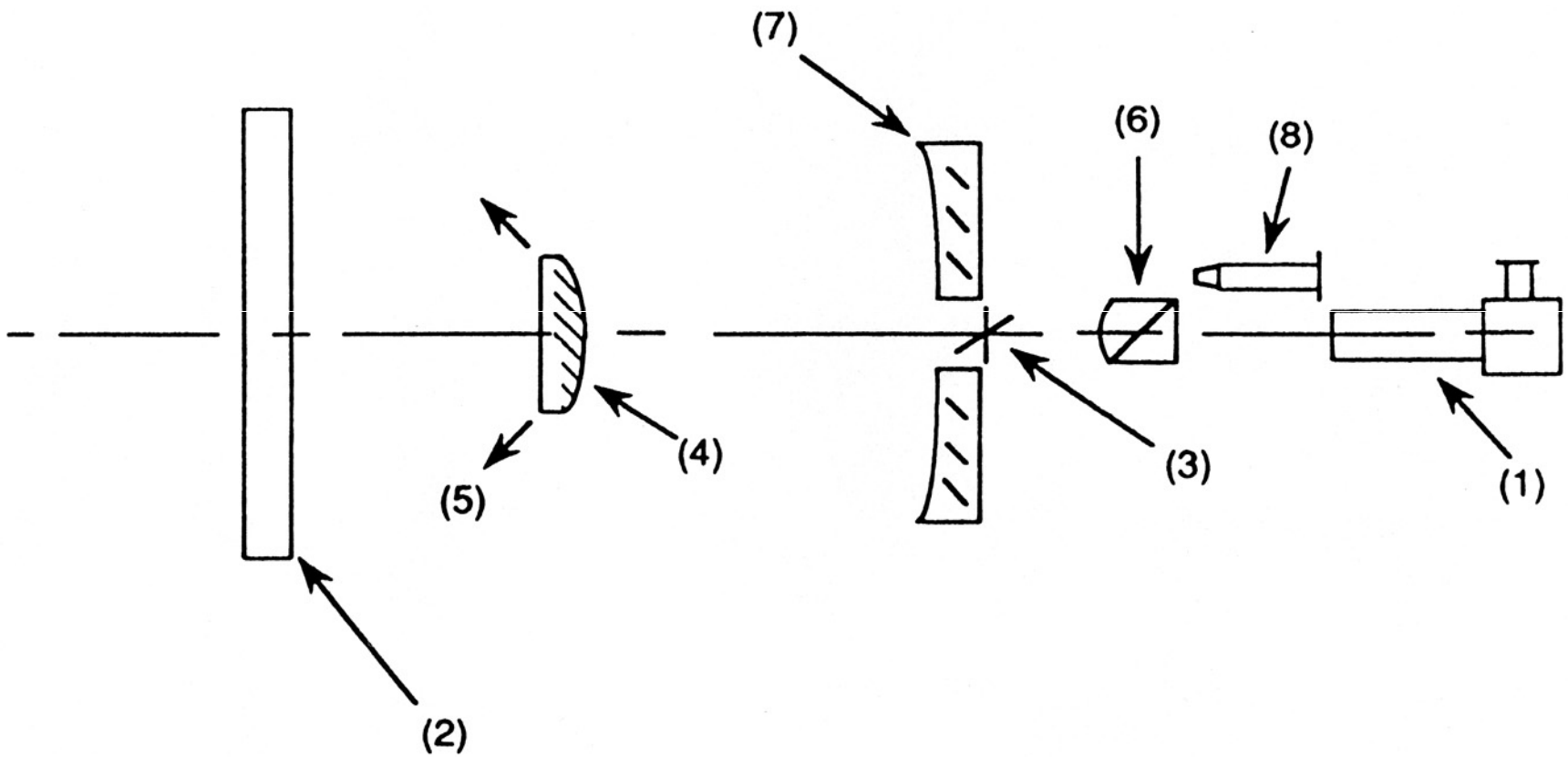

Cassegrain Alignment Using Spot Size or Wavefront in Autocollimation

1. Set up alignment telescope
2. Alignment flat in autocollimation
3. Center primary
4. Center secondary
5. Remove tilt from secondary
6. Place LACI at focal plane; search for return image
7. Tilt primary until images is on optical axis
8. Now examine image or wavefront. This is best done through focus or slightly out of focus. Coma will be visible if misaligned. Determine which 2 degrees of freedom will be used (e.g. tilt flat and primary, tilt primary and secondary, etc.) Tilt the desired mirror slowly in the direction of the coma arrow (or opposite it). Decenter the other component in order to bring the return image on-axis. Observing the coma in the image. Estimate how much more tilt is required. Keep repeating this procedure until the coma is removed

Coma and Boresight Correction by Tilting and Decentering

- What do we do when the prior techniques are not good enough and coma is present on-axis?
- Well, coma & boresight errors are linear with tilt & decenter
- Thus we can set up 4 simultaneous linear equations and solve for an on-axis solution
- In practice, we don't solve equations -- We turn two misalignment 'dials' simultaneously (e.g. decenter adjustments of the primary & secondary mirrors) such that the image stays fixed & coma is removed.
- **THIS IS A VERY POWERFUL ALIGNMENT TECHNIQUE!**