October 10, 2006 Lecture 15 Name Solutions

Closed book; closed notes. Time limit: 75 minutes.
An equation sheet is attached and can be removed.
Use the back sides if required.
Do not use any pre-stored information or programs in your calculator.
Note any assumptions you make in solving the problems.
Show your work. Present it in a neat and logical fashion.
If a method of solution is specified, that method must be used.

Distance Students: Please return the original exam only; do not FAX an additional copy.

1) (10 points) Draw the tunnel diagram for this prism with the ray path shown. As shown, the prism has two roof surfaces.

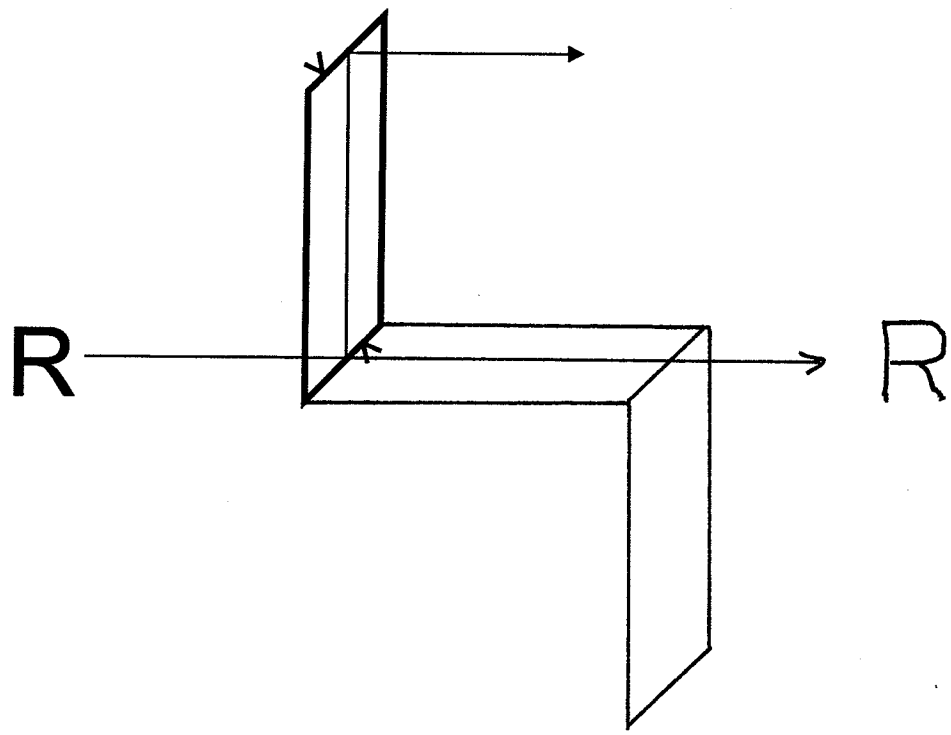

Also show the output parity and orientation. How do the optical properties of this prism change if the roofs on the two surfaces are deleted?

- Without the roofs, the output parity and orientation are the same - no change.
- The roofs do increase the angles of incidence at the TIR surfaces, increasing the angular acceptance of the prism.

2) (10 points) The diagram below shows a number of directed distances. Using the sign conventions of the class, determine equations for the paraxial angle u and the directed distance z in terms of a, b, c, d, e, f, g and h.

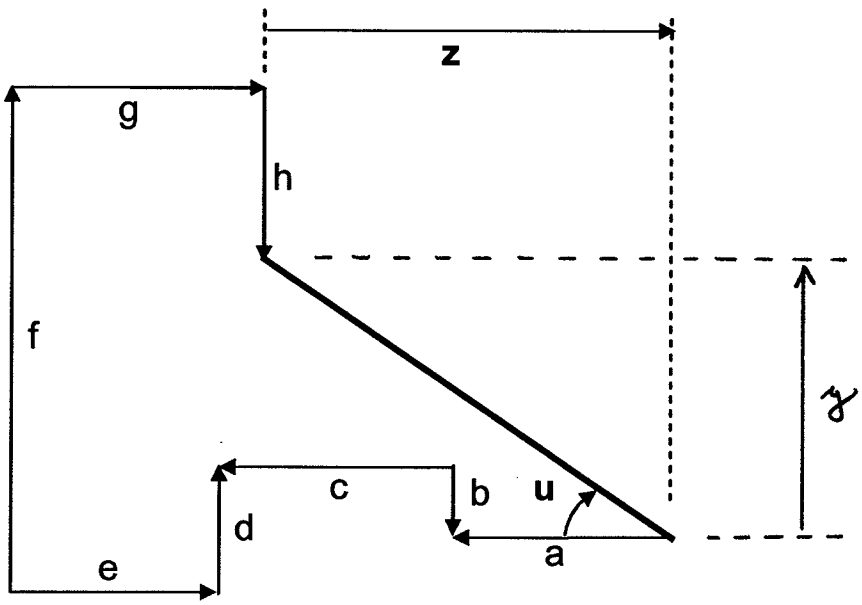

$$z = -a - c + e - g$$

$$y = -b - d + f + h$$

u is a negative paraxial angle

$$u = -\frac{y}{z} = \frac{b + d - f - h}{-a - c + e - g}$$

3) (10 points) A 4 cm flower is to be imaged onto a 1 cm detector. The image of the flower fills the detector, and the separation between the flower and the detector is 25 cm. What is the required focal length of the thin lens?

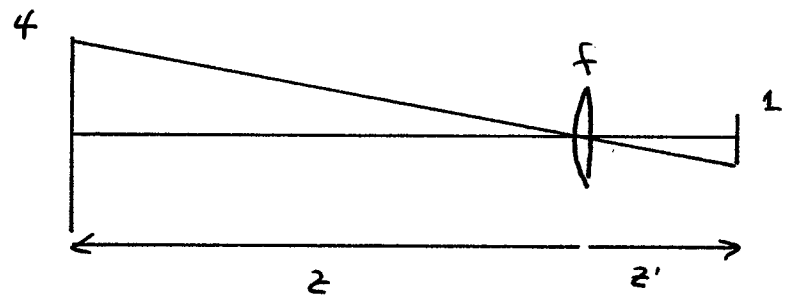

Real object - Real image

$m = h'/h = -1/4$ $\qquad$ $m = z'/z$

$z = -4z'$

$L = -z + z' = 25\text{ cm}$

$5z' = 25\text{ cm}$

$z' = 5\text{ cm}$

$z = -20\text{ cm}$

$\frac{1}{z'} = \frac{1}{z} + \frac{1}{f}$ $\qquad$ $\frac{1}{5} = \frac{1}{-20} + \frac{1}{f}$

$f = 4\text{ cm}$

4) (25 points) A Gregorian objective is an all reflective system that uses two concave mirrors:

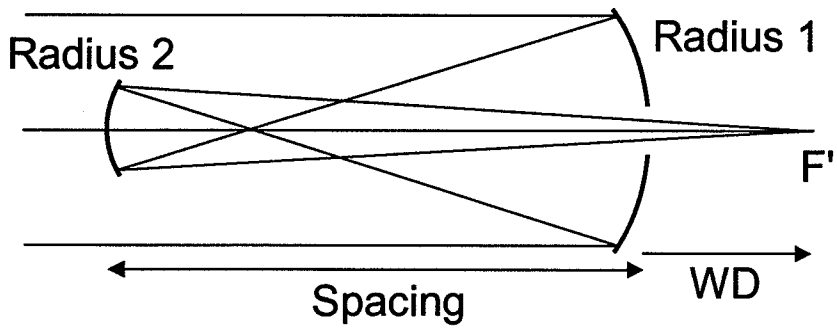

Radius 1 = 100 mm
Radius 2 = 40 mm
Spacing = 75 mm

a) Use Gaussian reduction to determine the focal length and working distance (WD) for this system.

$R_1 = -100$ mm

$R_2 = 40$ mm

$t = -75$ mm

$\phi = (n' - n)/R$

$n_1 = n_3 = 1.0$

$n_2 = -1.0$

$\phi_1 = -2/R_1 = .02/\text{mm}$

$\phi_2 = 2/R_2 = .05/\text{mm}$

$\phi = \phi_1 + \phi_2 - \phi_1 \phi_2 \tau$

$\tau = t/n_2 = 75$ mm

$\phi = -.005/\text{mm}$

Continues...

$f = -200$ mm

$\delta' = d' = -\frac{\phi_1}{\phi}\tau$ (from R_2)

$d' = 300$ mm (to the right of R_2)

$BFD = d' + f_{12}' = d' + f = 100$ mm (from R_2)

$WD = BFD - \text{Spacing} = BFD + t$

$WD = 25$ mm

b) You should have found that this system has a negative power and focal length, yet it forms a real image. Explain this result.

The rear principal plane is to the right of the rear focal point.

The primary mirror forms an intermediate image that is relayed or re-imaged by the secondary mirror to the focal point. The intermediate image is real.

As a result, the marginal ray approaches F' from below the axis, and we must go beyond F' to find the plane of unit positive magnification - P'. This is the plane where the image ray has the same height as the object ray.

5) (15 points) An afocal system is to be fabricated by polishing convex surfaces onto both ends of a 150 mm long glass rod. The magnitude of the lateral magnification of the system is 0.5, and the glass has an index of refraction of 1.5.

What are the two required radii of curvature? $|m| = 0.5$

Both surfaces are convex $\rightarrow$ $\phi_1 > 0$ $\phi_2 > 0$

$f_1 > 0$ $f_2 > 0$

$$m = -\frac{f_2}{f_1} = -0.5 \quad \text{(must be negative)}$$

Afocal: $L = f'_{R1} - f_{F2}$ $f'_{R1} = n f_1$ $f_{F2} = -n f_2$

$$L = n f_1 + n f_2 = 150 \text{ mm}$$

$$n = 1.5 \qquad f_1 = 2 f_2$$

$$1.5(2f_2 + f_2) = 150$$

$$f_2 = 33.33 \text{ mm}$$

$$f_1 = 66.67 \text{ mm}$$

$$\phi_1 = \frac{1}{f_1} = (n-1)/R_1 \qquad \phi_2 = \frac{1}{f_2} = (1-n)/R_2$$

$$R_1 = 33.33 \text{ mm}$$

$$R_2 = -16.67 \text{ mm}$$

6) (20 points) An optical system is comprised of three refracting surfaces with the following prescription:

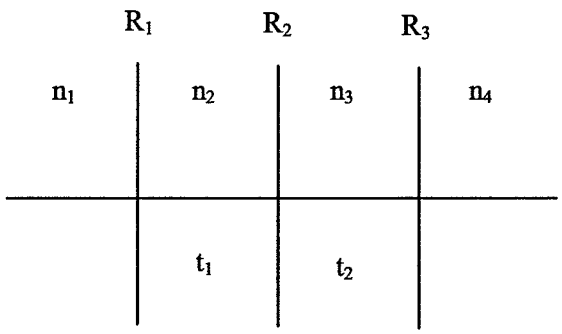

$n_1 = 1.0$
$n_2 = 1.40$
$n_3 = 1.80$
$n_4 = 1.33$

$t_1 = 20.0$ mm
$t_2 = 20.0$ mm

$R_1 = 20.0$ mm
$R_2 = -10.0$ mm
$R_3 = -15.0$ mm

Use paraxial raytrace methods to determine the system power and focal length, and the locations of the rear focal point F' and rear principal plane P' relative to the last surface.

Trace a ray for an object at infinity:

Surface	0	1	2	3	F' 4	5	6
∅ R		20	-10	-15			
t	∞	20	20	BFD			
n	1.0	1.40	1.80	1.33			
−ϕ		-.02	.04	-.03133			
t/n		14.286	11.111	48.21			
y	1	1	.7143	.8095	0		
nu	0	-.02	.00857	-.01679			
u							
y							
nu							
u							

Blank page follows...

$$\phi = -\omega'/y_1 = .01679$$

$$f = \frac{1}{\phi} = 59.56 \text{ mm}$$

$$f_R' = n_4 f = 79.2 \text{ mm}$$

$$\frac{BFD}{n_4} = 48.21 \text{ mm}$$

$$BFD = \underline{64.1} \text{ mm}$$

$$BFD = f_R' + d'$$

$$d' = \underline{-15.1 \text{ mm}}$$

P': 15.1 mm to the left of R_3

F': 64.1 mm to the right of R_3

$$\overline{P'F'} = f_R' = 79.2 \text{ mm}$$

7) (10 points) An optical system in air is comprised of two thin lenses:

$f_1 = 50$ mm
$f_2 = -50$ mm
$t = 20$ mm

Use a paraxial raytrace to determine the system focal length and the location of the front focal point F relative to the first lens.

Trace a ray from F

Surface	0	1	2	3	4	5	6
f			50	-50			
$-\phi$			-.02	.02			
t		175	20	∞			
y		0	1.4	1	1		
u		.008	-.02	0			
y							
u							

$\phi = \frac{u}{y'} = .008/\text{mm}$ $y' = 1$

$f = \frac{1}{\phi} = 125$ mm

$\overline{FV_1} = 175$ mm

$FFD = -\overline{FV_1} = -175$ mm

$FFD = d + f_F = d - f$
$d = -50$ mm
not required

P: 50 mm to the left of f_1

F: 175 mm to the left of f_1