2.0 Qualification of Optical Material

Materials for optical parts are generally given some inspection before they are set up for grinding because the cost of the optical work is often quite large compared with the cost of the material.

2.0 Qualification of Optical Material

- 2.1 Internal Defects
- 2.2 Measurement of Refractive Index
  - 2.2.1 Spectrometers
    - 2.2.1.1 Basic Spectrometer Technique
    - 2.2.1.2 Autocollimating Goniometer
    - 2.2.1.3 Hilger Chance Refractometer
  - 2.2.2 Critical Angle Systems
    - 2.2.2.1 Abbe Refractometer
    - 2.2.2.2 Pulfrich Refractometer
  - 2.2.3 Ellipsometry
- 2.3 Strain
- 2.4 Mechanical and Thermal Properties

2.1 Internal Defects

Bubbles, seeds, stones, and striae can be detected by illuminating the sample with a bright light and observing the scattered light.

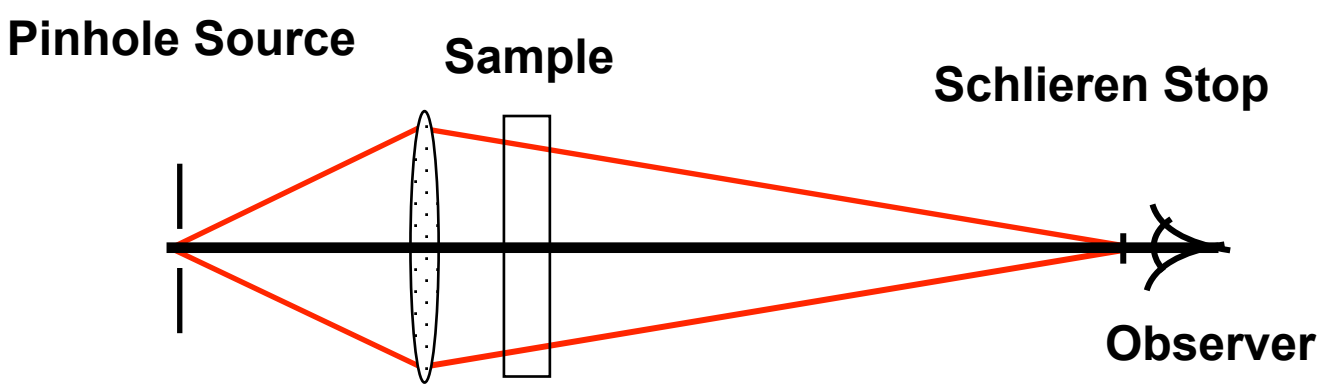

Schlieren test for observing bubbles, seeds, stones, and striae.

Schott Bubble Specifications

Includes all bubbles and inclusions ≥ 0.06mm

Bubble Group	Total bubble cross-section per $100cm^3$ volume of glass
0	$0.00 – 0.029mm^2$
1	$0.03 – 0.10mm^2$
2	$0.11 – 0.25mm^2$
3	$0.26 – 0.50mm^2$
4	$0.51 – 1.00mm^2$
5	$1.01 – 2.00mm^2$

THE UNIVERSITY OF ARIZONA

Schott Index Uniformity Specifications

(A) Normal Quality (N) tested for striae and birefringence in one direction.

Normal quality ⇒ variation of $n_d \leq \pm 1x10^{-4}$ within one melt.

NH1 - $\Delta n_d \leq \pm 2x10^{-5}$ within one melt

NH2 - $\Delta n_d \leq \pm 5x10^{-6}$ within one blank

(B) Precision Quality (P) tested in one or more directions

$\Delta n_d \leq \pm 5x10^{-6}$ within one blank

THE UNIVERSITY OF ARIZONA

2.2 Measurement of Refractive Index

2.2.1 Spectrometers

Need to know the angle of the sample prism and the angle through which a beam of light is deviated by the prism, under known conditions.

Minimum angle of deviation

$$n = \frac{\sin\frac{1}{2}(A+D)}{\sin\frac{1}{2}A}$$

Deriving Minimum Angle of Deviation

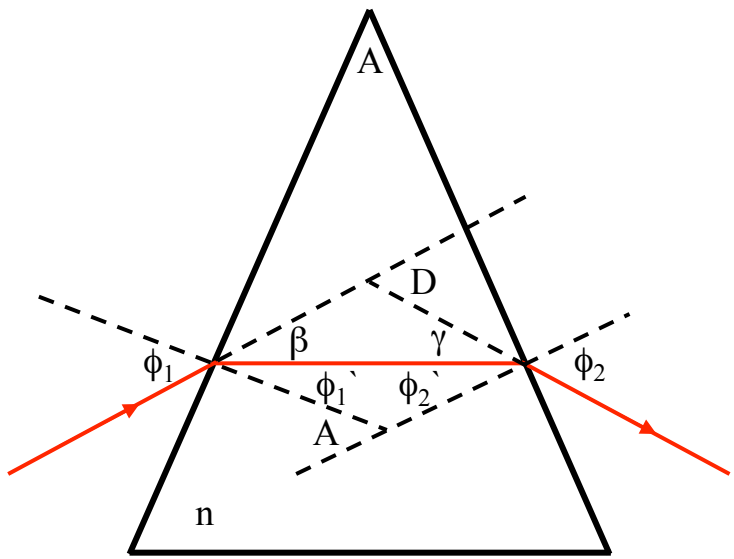

n is the refractive index of the prism, A is the prism angle, and D is the angle of deviation.

$\phi_1 = \phi_2$, otherwise by reversibility of light rays there would be two different angles of incidence giving a minimum angle of deviation.

$$\phi_1^{'} = \phi_2^{'} \qquad A = 2\phi_1^{'}$$

$$\beta = \gamma \qquad D = 2\beta$$

$$\phi_1 = \phi_1^{'} + \beta$$

$$\phi_1^{'} = \frac{1}{2}A \qquad \phi_1 = \frac{1}{2}(A + D)$$

From Snell's law $nSin[\phi_1^{'}] = Sin[\phi_1]$

$$n = \frac{Sin\left[\frac{1}{2}(A+D)\right]}{Sin\left[\frac{1}{2}A\right]}$$

THE UNIVERSITY OF ARIZONA.

Schematic Diagram of Autocollimator

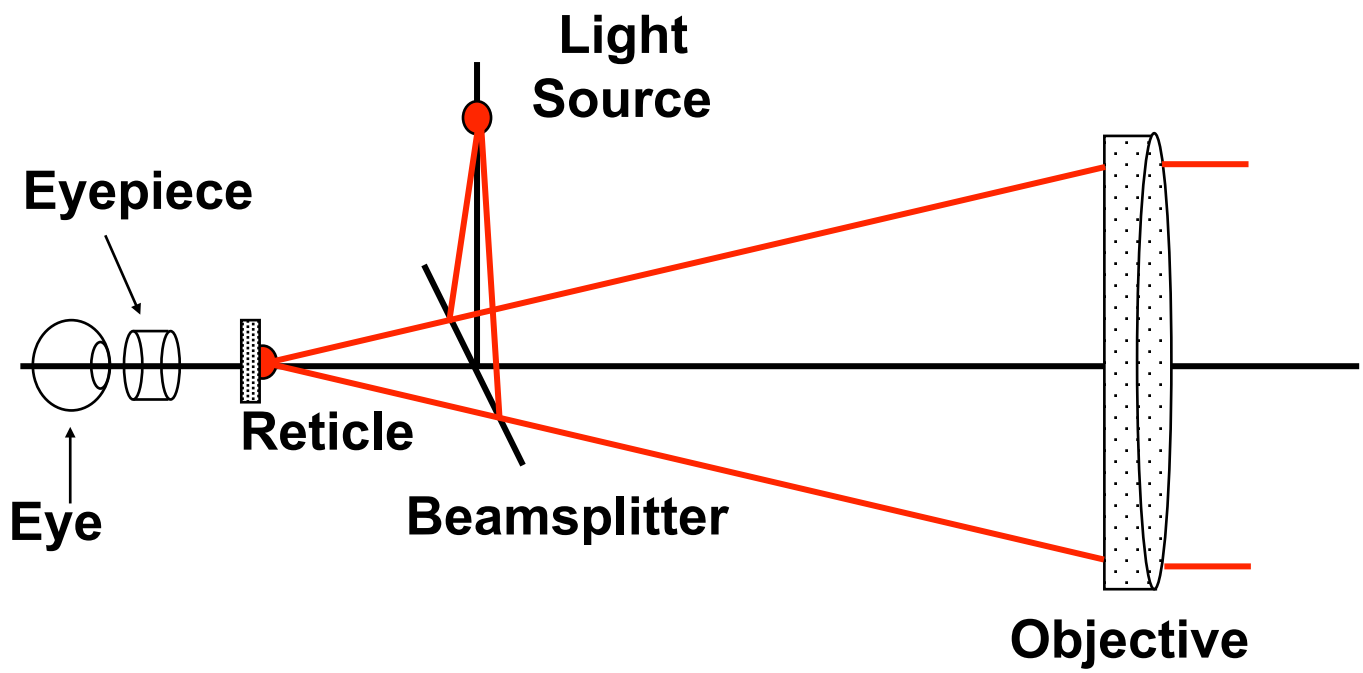

THE UNIVERSITY OF ARIZONA

2.2.1.1 Basic Spectrometer Technique

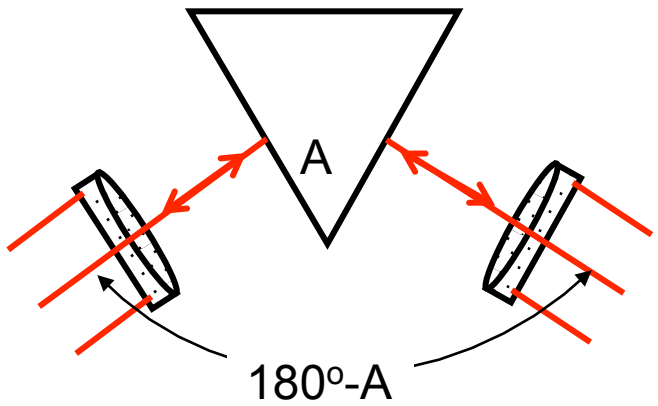

(a) Prism Angle

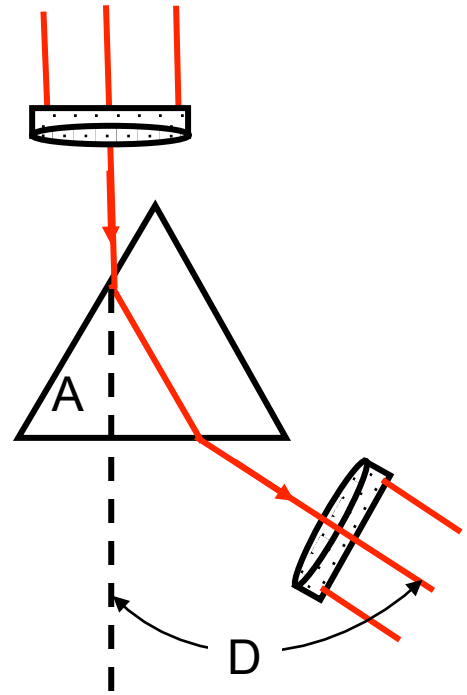

(b) Deviation

Preferred methods for measuring prism and deviation angles.

THE UNIVERSITY OF ARIZONA

2.2.1.2 Autocollimating Goniometer

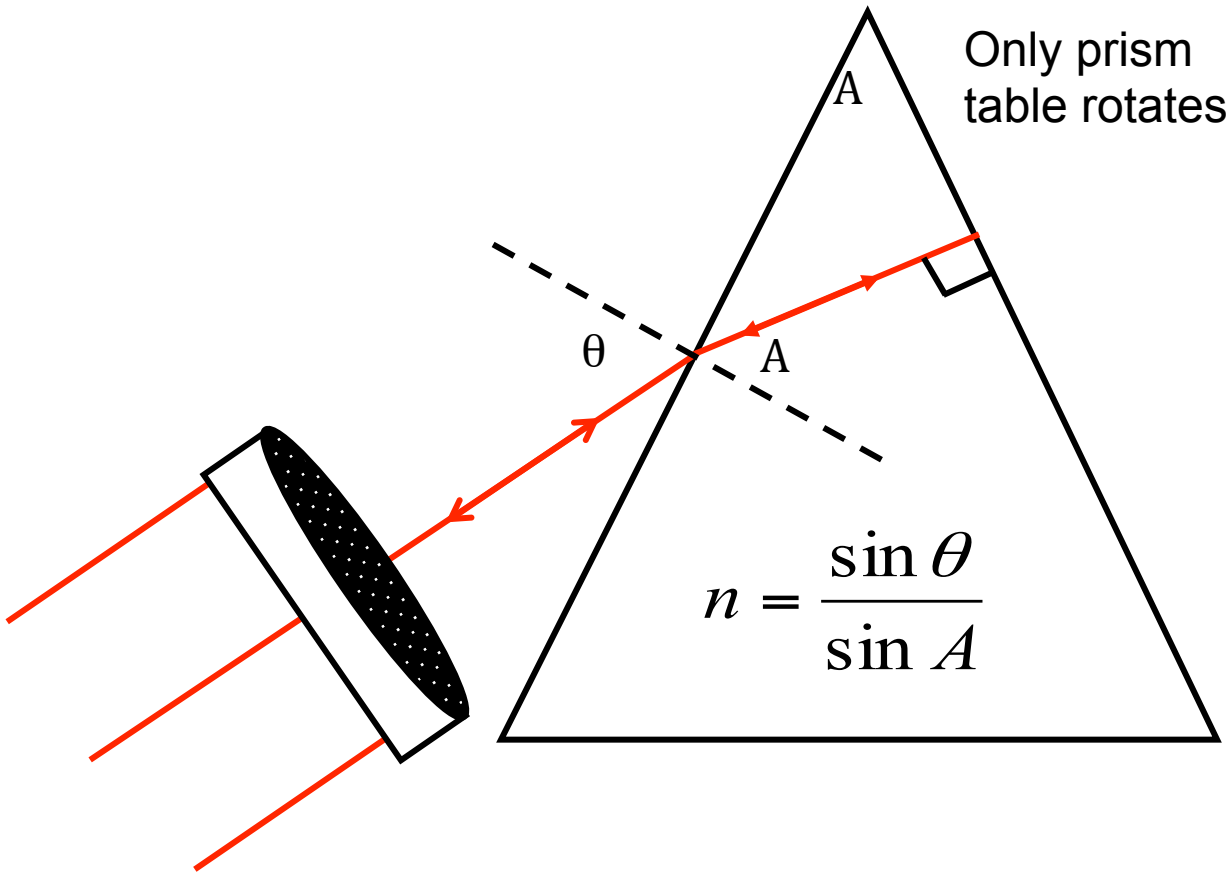

2.2.1.3 Hilger Chance Refractometer

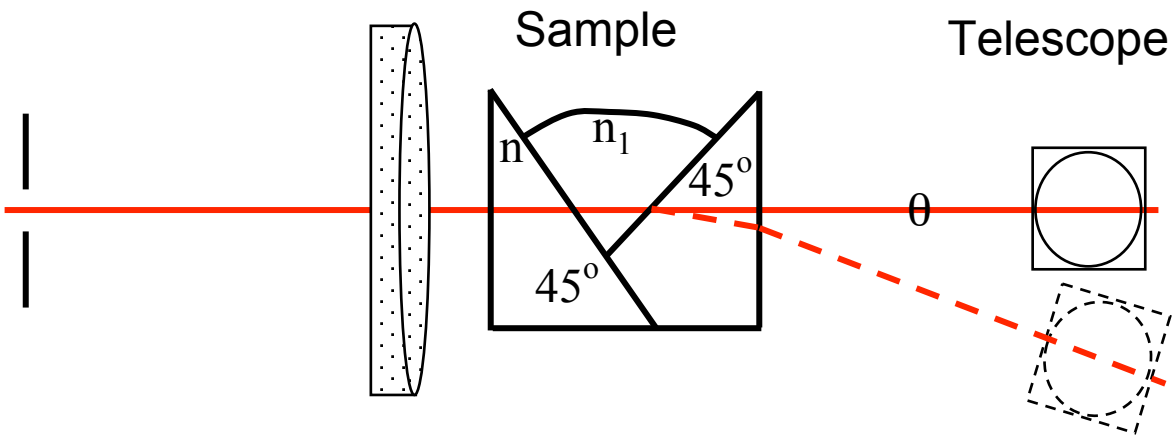

$$n_1 = \left[n^2 - \sin\theta \left(n^2 - \sin^2\theta \right)^{\frac{1}{2}} \right]^{\frac{1}{2}}$$

2.2.2 Critical Angle Systems

The critical angle condition at which total internal reflection commences is put to good use in a large number of instruments. Three primary reasons for being popular.

- Problem of measuring the angle of the sample prism is avoided.
- Recognition of the critical angle boundary completely specifies the angle of incidence.
- Sample, be it a liquid or a solid, can be colored.
- Disadvantage: when a critical angle measurement is made, only the skin refractive index is measured, and this may be different from the bulk refractive index.

Critical Angle Systems – Basic Principle

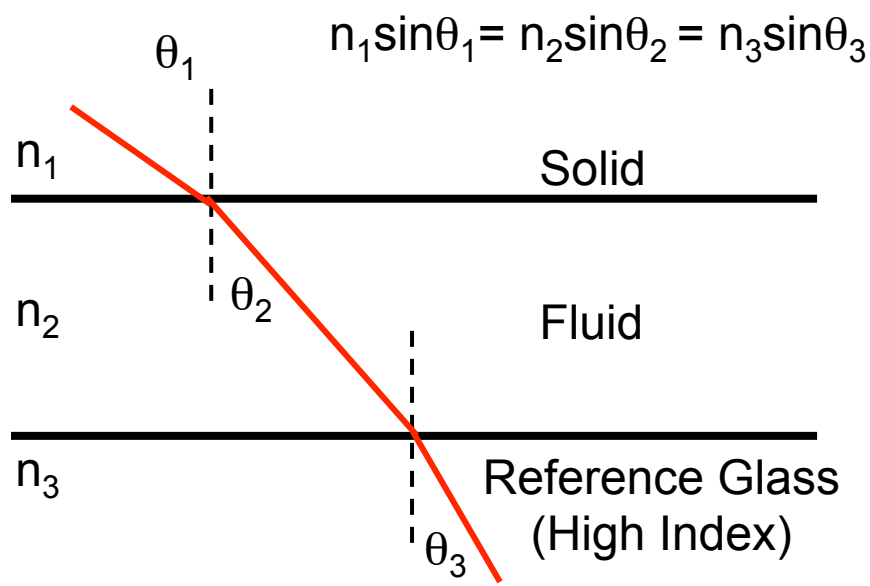

If a solid is being measured, $n_2 > n_1$ and $n_3 > n_1$. θ_1 can go to 90°, in which case $n_1 = n_3 \sin\theta_3$, and if n_3 is known and θ_3 is measured, n_1 can be determined. If the fluid is measured, $n_1 > n_2$. A second requirement is that $n_3 > n_2$. θ_2 can go to 90°, in which case n_2 is given by $n_2 = n_3 \sin\theta_3$.

THE UNIVERSITY OF ARIZONA.

2.2.2.1 Abbe Refractometer

2.2.2.2 Pulfrich Refractometer

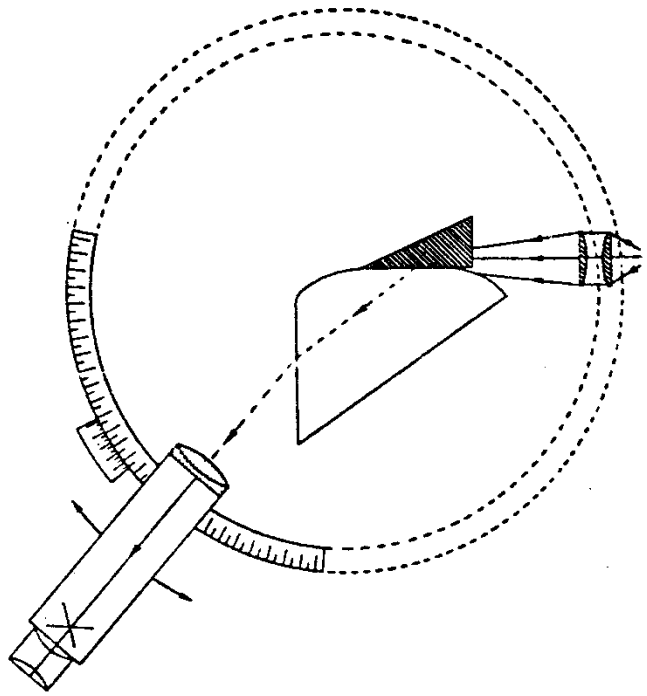

If the block has an angle of 90°, the refractive index n_1 of the specimen is obtained from

$$n_1 = \left(n^2 - \sin^2\theta\right)^{\frac{1}{2}}$$

in which n is the refractive index of the block and θ is the final angle of emergence obtained from the telescope setting.

2.2.3 Ellipsometry

See appendix in notes

Variable Angle Ellipsometer

THE UNIVERSITY OF ARIZONA

Typical Ellipsometer

Gaertner Ellipsometer

THE UNIVERSITY OF ARIZONA

2.3 Strain

If glass is subjected to a steady longitudinal tension, the glass becomes slightly elongated (strained); as a consequence it becomes birefringent. If the strain is small, the retardation is proportional to strain.

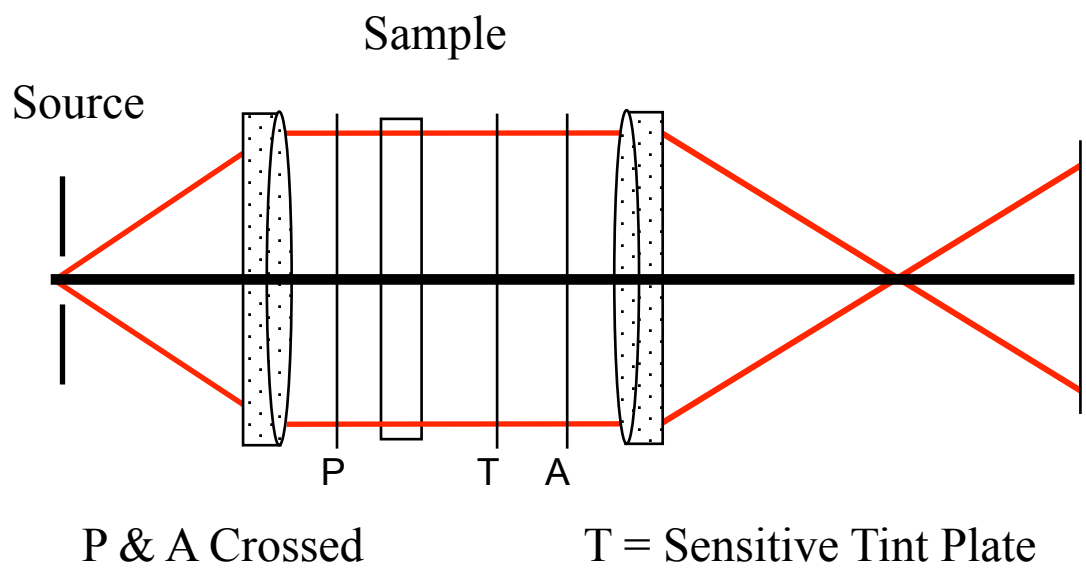

Polariscope

2.4 Mechanical and Thermal Properties

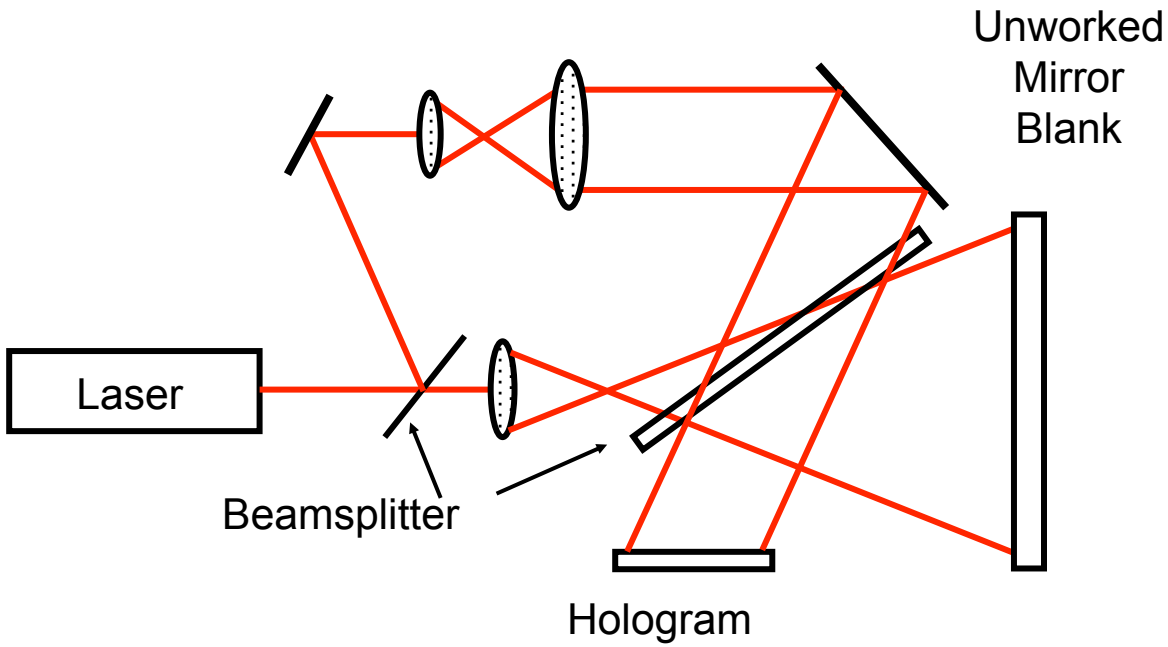

Holographic Test System